* DENOTES EPOXY-COATED BARS
ALL DIMENSIONS ARE IN MILLIMETERS.

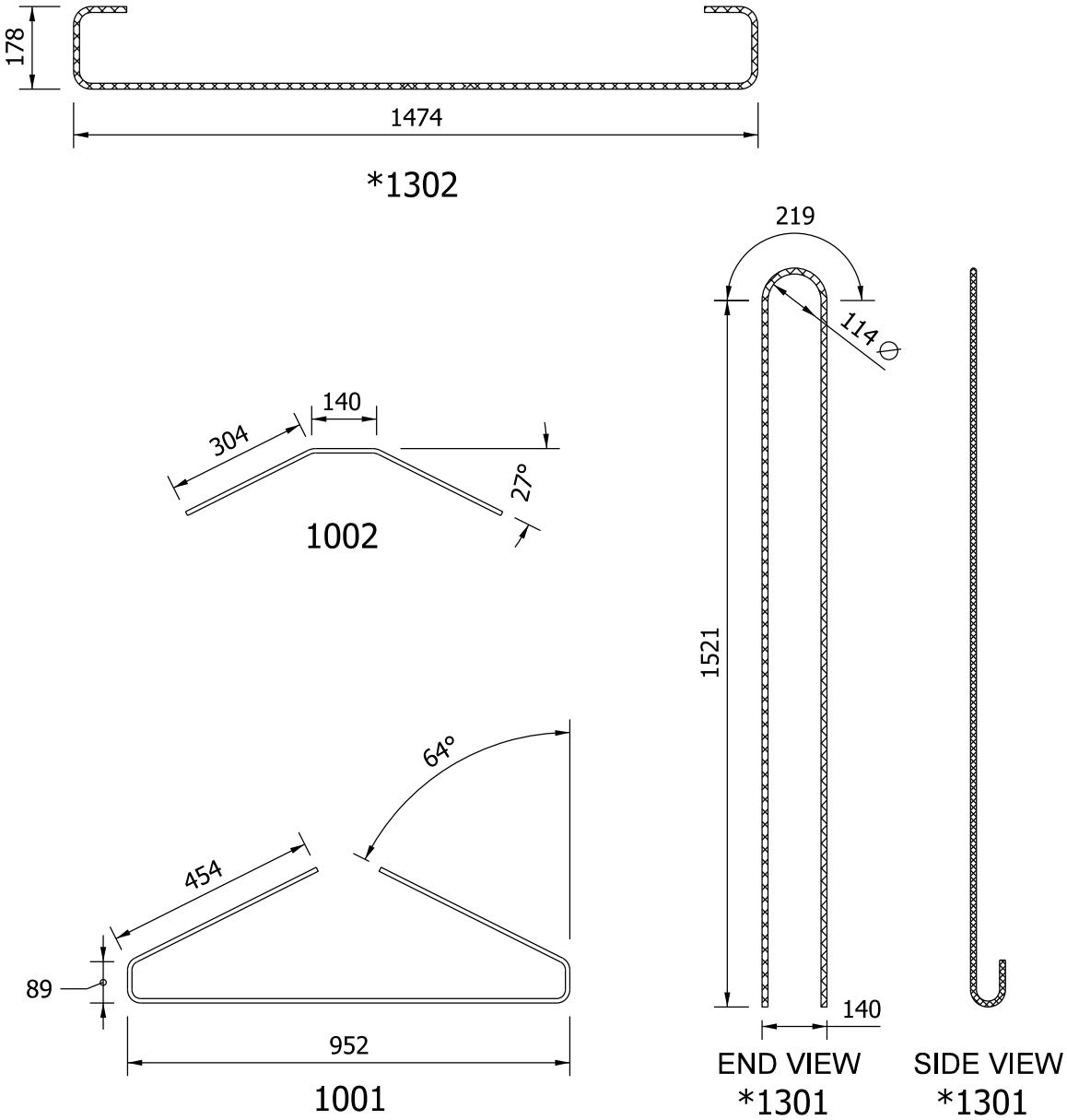

BULB - TEE BEAM
TYPE BT 1524 x 1550
BAR BENDING DETAILS

Figure 63-14W(2)