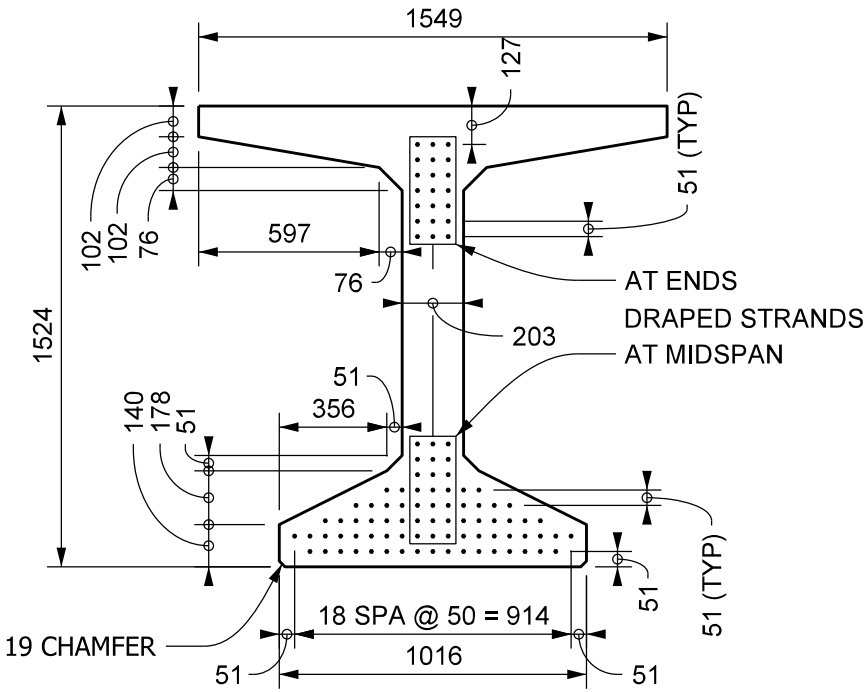


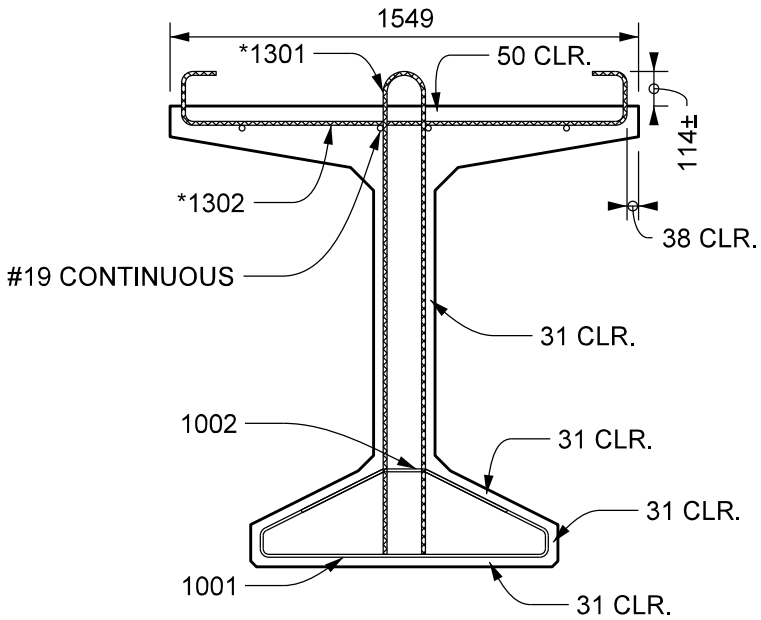


NOTES:
1. BARS 1001 AND 1002 COMBINED TO FORM ONE STIRRUP.
2. ▩*DENOTES EPOXY-COATED BARS
3. LOCATE HOLDDOWNS 1524 EACH SIDE OF CENTER LINE OF BEAM.
4. ALL DIMENSIONS ARE IN MILLIMETERS.

# BULB-TEE BEAM TYPE BT 1524 x 1550 SECTIONS SHOWING PRESTRESSING AND MILD REINFORCING STEEL

Figure 63-14W(1)