* DENOTES EPOXY-COATED BARS
ALL DIMENSIONS ARE IN MILLIMETERS.

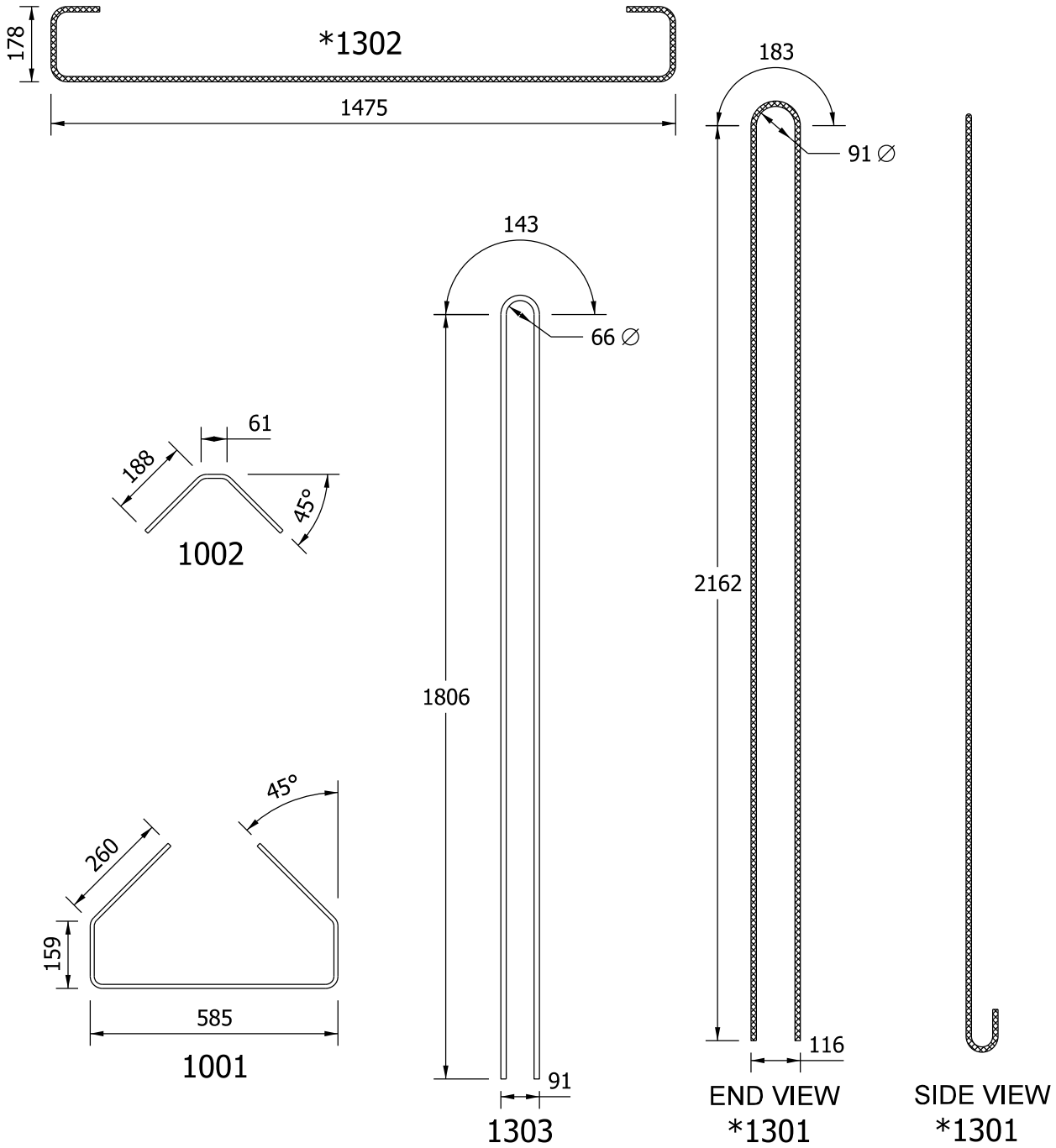


BULB - TEE BEAM
TYPE BT 2134 x 1524
BAR BENDING DETAILS

Figure 63-14R(2)