BEAM PROPERTIES

A_B = 609,100 mm^2
I_B = 153,645 x 10^6 mm^4
S_{TB}= 258,567 x 10^3 mm^3
S_{BB}= 197,542 x 10^3 mm^3
Y_{TB}= 594.2 mm
Y_{BB}= 777.8 mm
Wt. = 14.37 kN/m

NOTES:
1. BARS 1001 AND 1002 COMBINED TO FORM ONE STIRRUP.
2. ▩*DENOTES EPOXY-COATED BARS
3. ALL DIMENSIONS ARE IN MILLIMETERS.

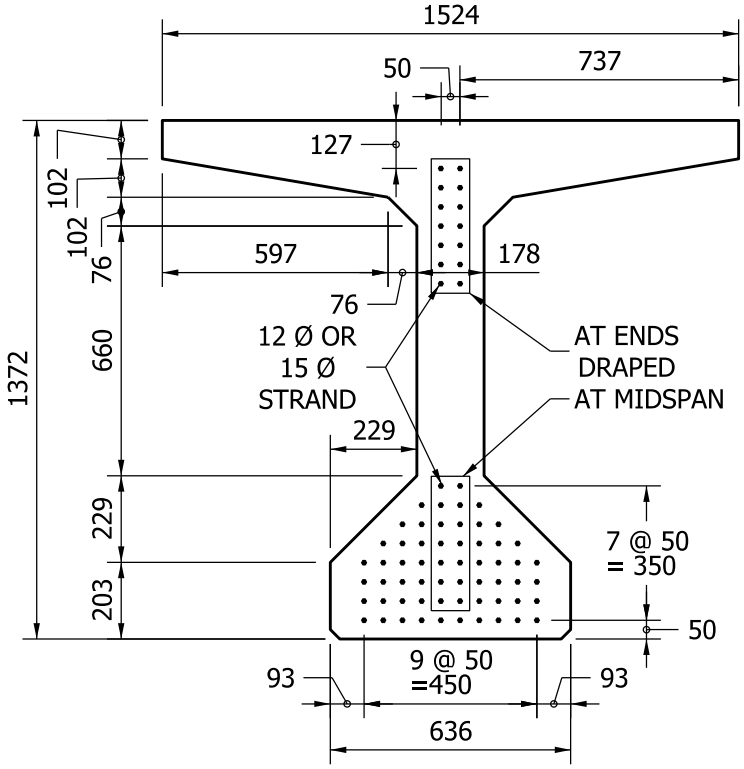

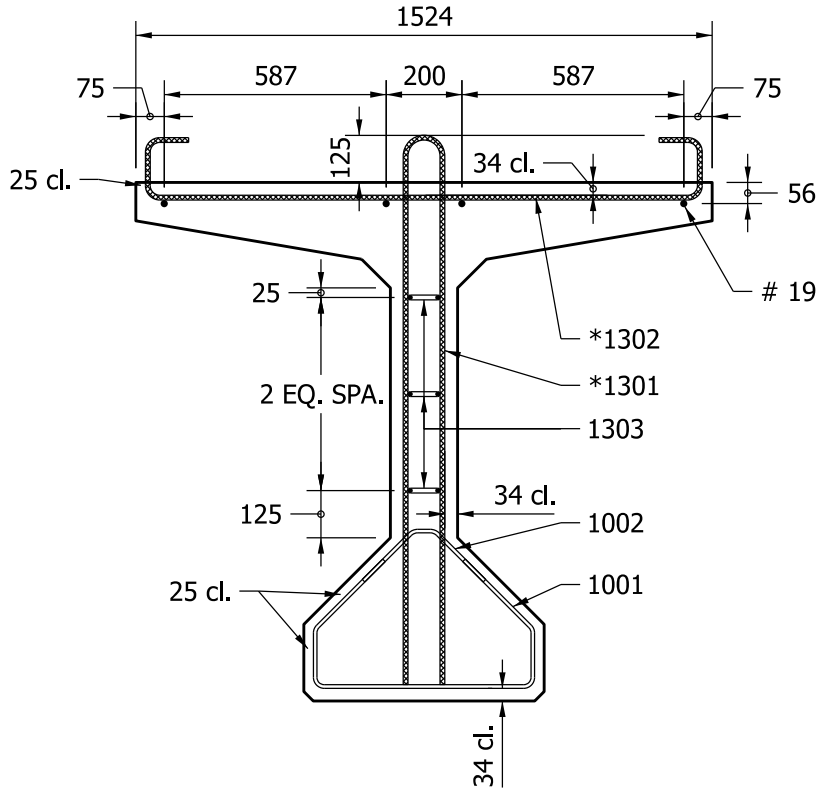

BULB - TEE BEAM
TYPE BT 1372 x 1524

Figure 63-14M(1)