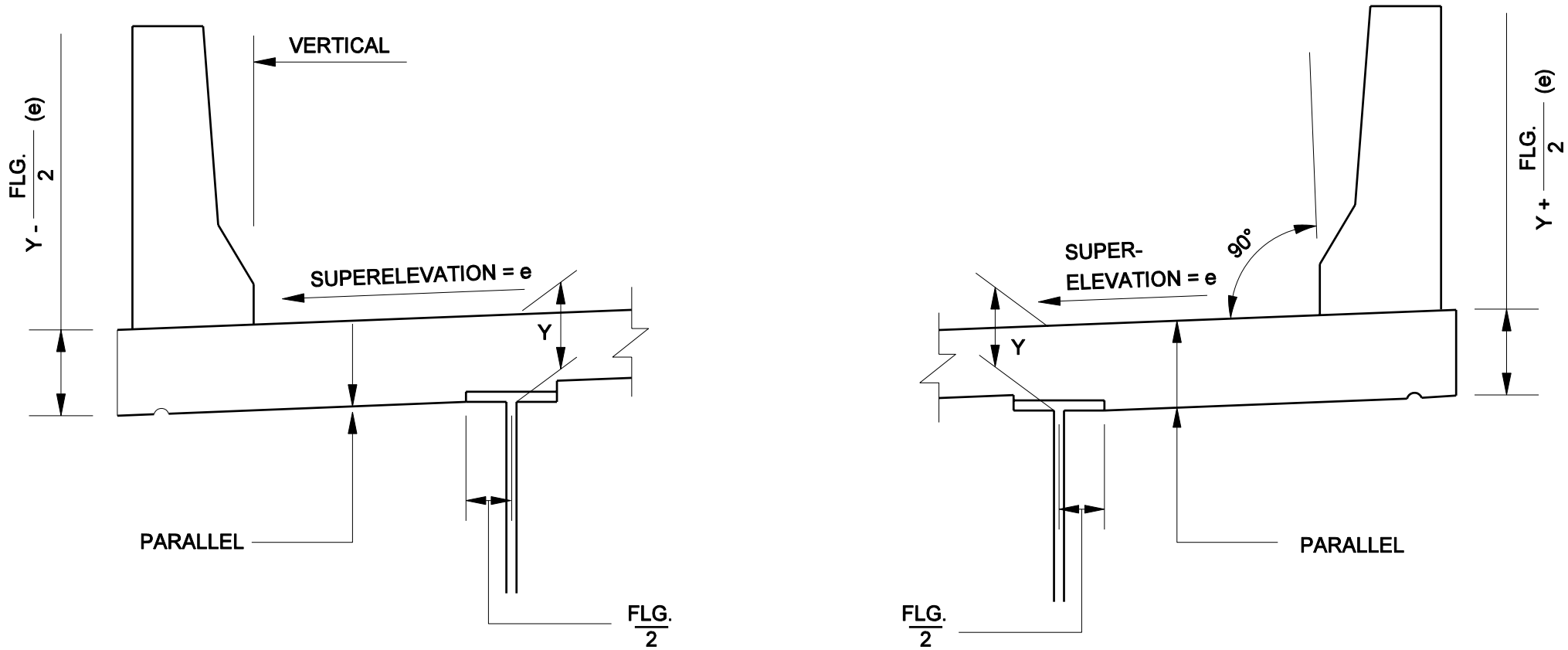

Y = CONTROL DIMENSION (mm)
FLG. = FLANGE WIDTH (mm)
e = SUPERELEVATION RATE (%)

DECK OVERHANG TREATMENTS
(Superelevated Structures)
Figure 61-5A