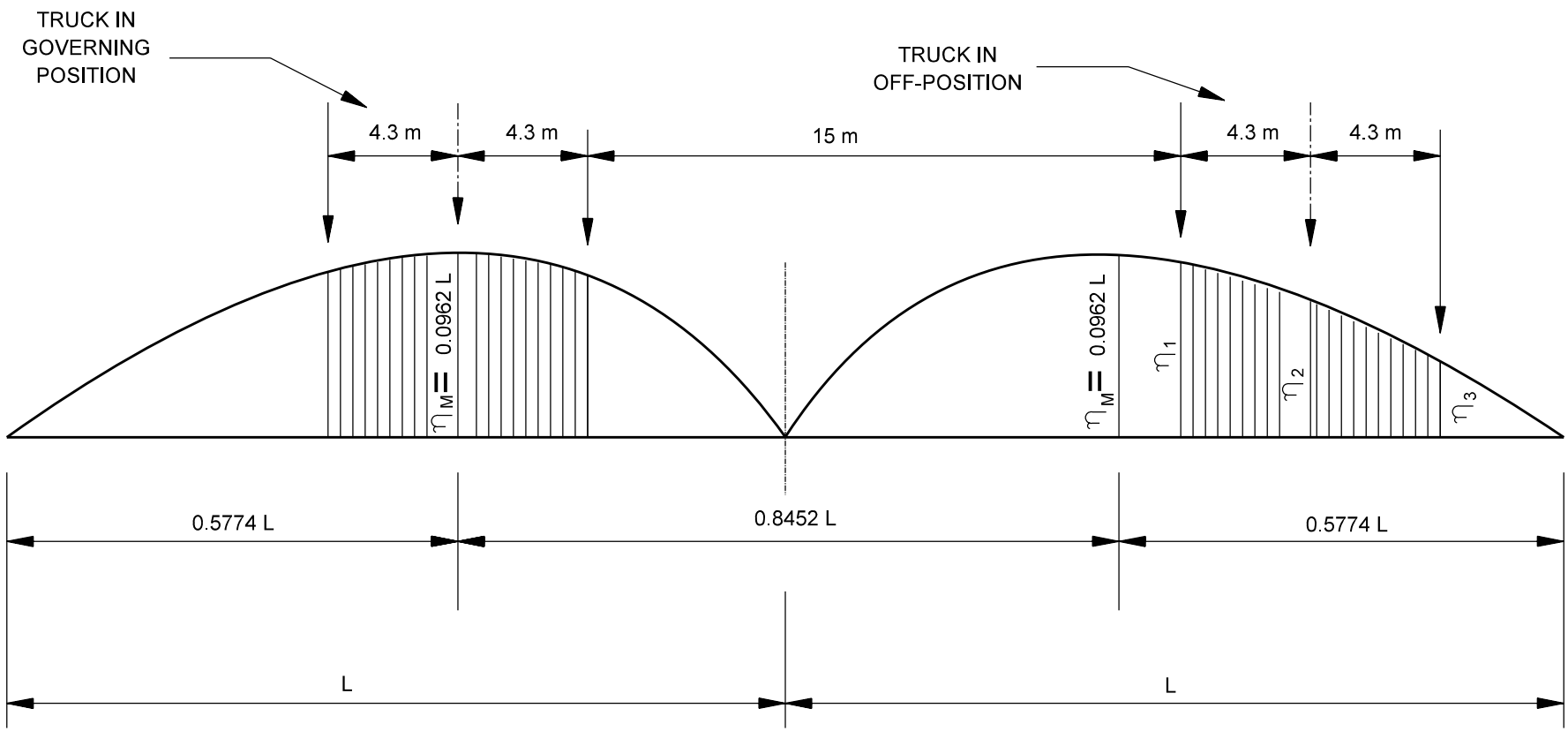

TWO-SPAN CONTINUOUS BEAM (L < 28 m)

Figure 60-5A