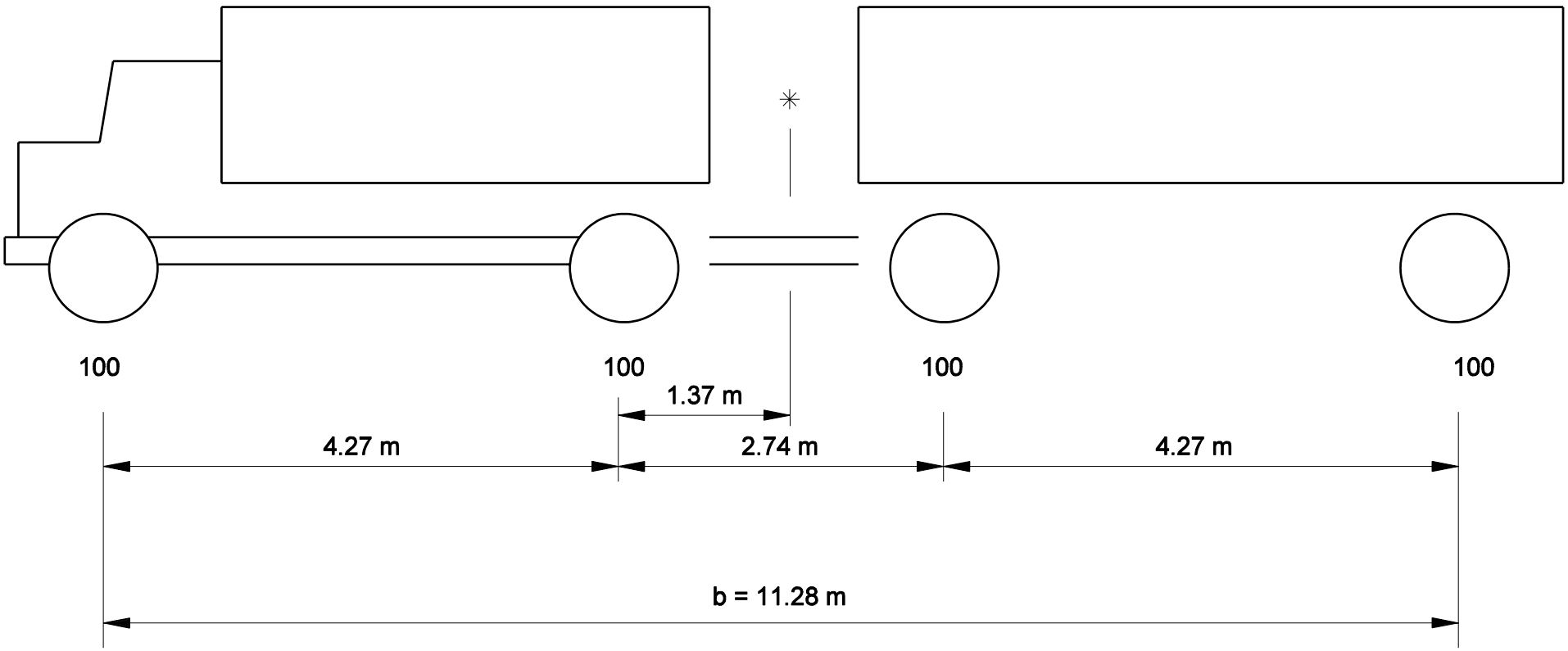

✳ INDICATES CENTER OF GRAVITY OF VEHICLE.

TOLL ROAD LOADING NO.2
(W = 400 kN)

Figure 60-3B