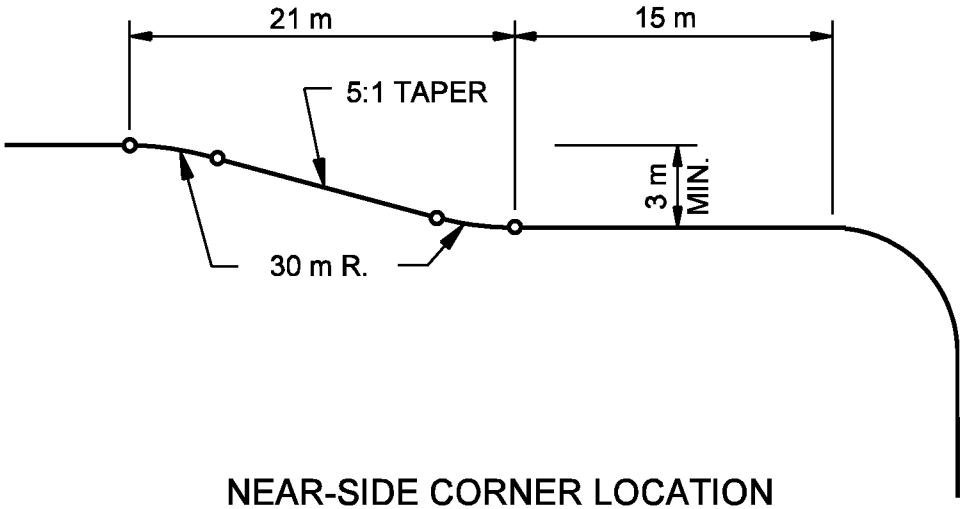

NEAR-SIDE CORNER LOCATION

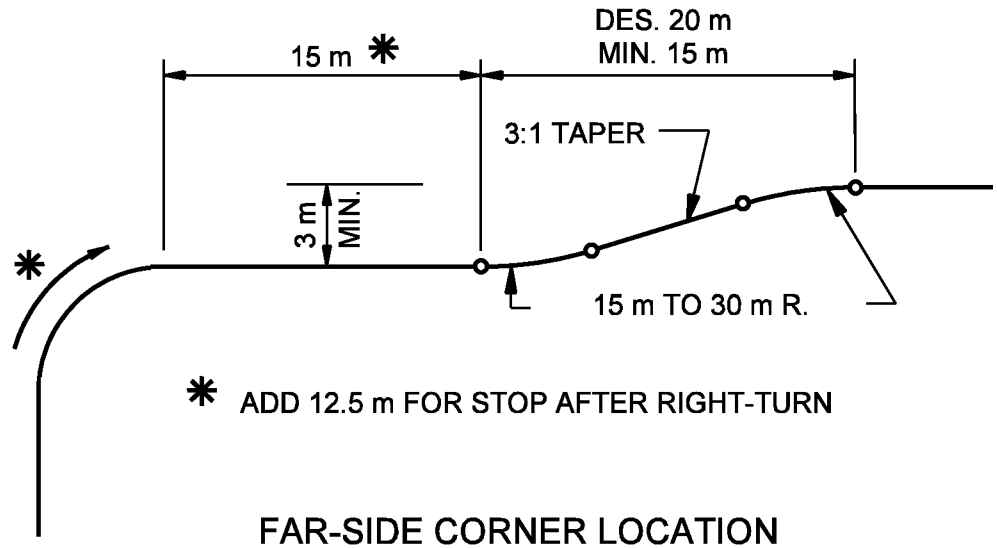

FAR-SIDE CORNER LOCATION

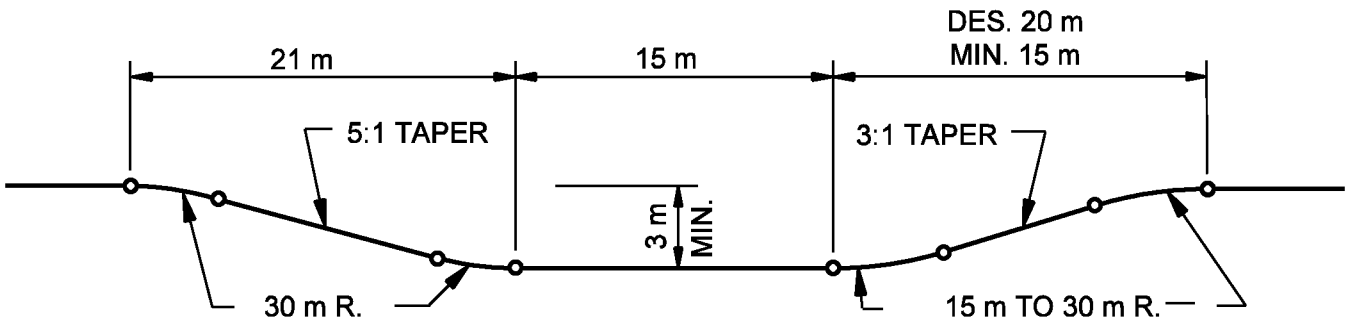

MID-BLOCK LOCATION

BUS TURNOUT DESIGNS

Figure 51-5B