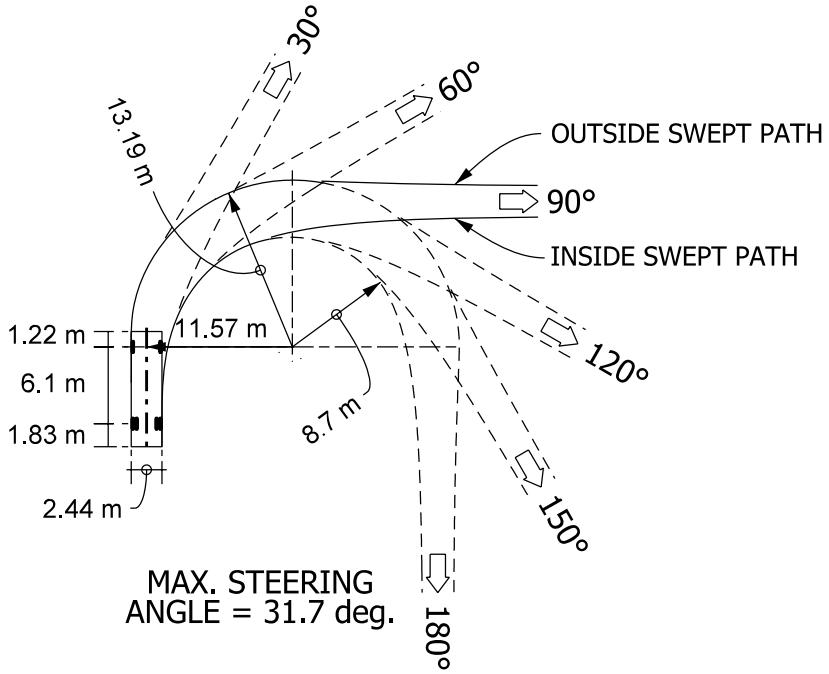

0 200 400
100 300 500

SU - DESIGN VEHICLE
(1:500 SCALE)

Figure 46 -12D