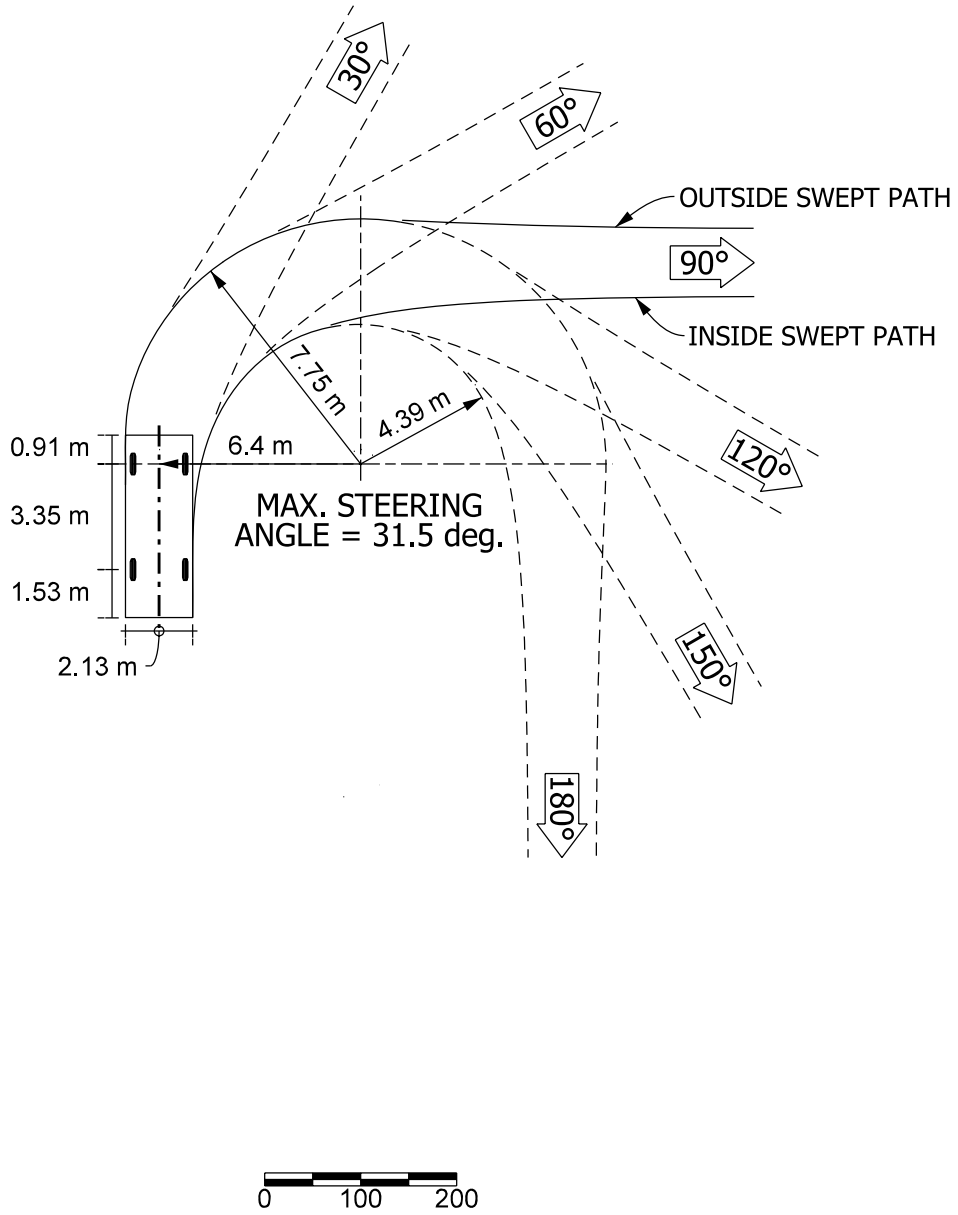

P - DESIGN VEHICLE
(1:200 SCALE)

Figure 46-12A