TABLE OF CONTENTS

TABLE OF CONTENTS 1

LIST OF FIGURES 6

52-6A Dusting 6
52-6B Block Cracking 6
52-6C Flushing 6
52-6D Longitudinal Cracking 6
52-6E Raveling 6
52-6F Reflective Cracking 6
52-6G Rutting 6
52-6H Shoulder Drop-off 6
52-6 I Thermal Cracking 6
52-6J Alligator or Fatigue Cracking 6
52-6K Alkali-Silica Reactivity (ASR) 6
52-6L Corner Break 6
52-6M "D" Cracking 6
52-6N Joint Failure 6
52-6 O Longitudinal Cracking 6
52-6P PCCP Joint-Seal Failure 6
52-6Q Polishing 6
52-6R Popout 6
52-6S Punchout 6
52-6T Transverse Cracking 6
52-6U Spalling 6
52-7A Preliminary HMA Pavement Thickness 6
52-7B Preliminary PCCP Thickness 6
52-7C [figure deleted] 6
52-7D Falling-Weight-Deflectometer Testing 6
52-7E Pavement Coring 6
52-8A Pavement Design Life 6
52-8B Performance Criteria for HMA Pavement or Overlay 6
52-8C Performance Criteria for Concrete Pavement or Overlay 6
52-8D MEPDG General Input Values for Asphalt Pavement 6
52-9A ESAL Category for QC/QA-HMA Mixtures 6
52-9B Mixture Type for HMA Mixtures 6
52-9C PCCP Patching Limits 6
52-10A Outlet Protector Slope Limits 6
52-10B Video-Inspection Contract Quantities 6
52-11A HMA PM Treatments 6
52-11B PCCP PM Treatments 6

52-12A [figure deleted] ... 7
52-13A Full-Depth HMA Pavement with Full Depth Shoulders ... 7
52-13B Full-Depth HMA Pavement with Composite Shoulders ... 7
52-13C [figure deleted] ... 7
52-13D Full-Depth HMA Pavement ... 7
52-13E Composite HMA / Compacted-Aggregate Pavement ... 7
52-13F PCCP Mainline with PCC Shoulder ... 7
52-13G PCCP Mainline with HMA Shoulder ... 7
52-13H PCCP with Concrete Curb ... 7
52-13 I Overlay, Tilt to Crown Section ... 7
52-13J Overlay, Crown to Crown Section ... 7
52-13K Retrofit Underdrain ... 7
52-13L Underdrain for HMA Mainline with Composite Shoulders ... 7
52-13M Underdrain for HMA Mainline with Full-Depth HMA Shoulders ... 7
52-13N Concrete Curb and Gutter for HMA Pavement with Underdrain ... 7
52-13O Concrete Curb and Gutter for HMA Pavement without Underdrain ... 7
52-13P PCCP with Underdrain ... 7
52-13Q Curbed PCCP with Underdrain ... 7
52-13R Longitudinal-Joint Options for Median Side of Concrete Pavement ... 7
52-13S Full-Depth HMA Ramp ... 7
52-13T PCCP Ramp ... 7
52-13U Ramp with Overlay ... 7
52-13V HMA Pavement with Concrete Curb and Underdrain ... 7
52-13W HMA Pavement with Concrete Curb and No Underdrain ... 7
52-13X Parking-Lot Pavement Sections ... 7
52-14A Editable Pavement-Design Request – INDOT Project ... 7
52-14B Editable Pavement-Design Request – LPA Project ... 7

52-1.0 INTRODUCTION ... 8

52-2.0 HISTORY ... 8

52-3.0 ABBREVIATIONS ... 9

52-4.0 PAVEMENT-DEVELOPMENT PROCESS ... 10

52-4.01 Planning and Preliminary Design ... 10
52-4.02 Final Design ... 11

52-5.0 PAVEMENT TYPES ... 11

52-5.01 Aggregate Pavement ... 11
52-5.02 Asphalt Pavement ... 11
52-5.02(01) HMA Surface ... 12

52-5.02(02) HMA Intermediate 12
52-5.02(03) HMA Base 12
52-5.02(04) Open-Graded Drainage Layer 12
52-5.02(05) Rich Bottom Layer 12
52-5.02(06) Compacted Aggregate Base 13
52-5.03 Portland Cement Concrete Pavement 13
52-5.04 Composite Pavement 13
52-5.05 Subgrade 14

52-6.0 PAVEMENT-SURFACE DISTRESSES 14

52-6.01 Aggregate Pavement 14
52-6.02 Asphalt Pavement 15
52-6.03 Concrete Pavement 18

52-7.0 PAVEMENT-DESIGN COORDINATION 21

52-7.01 Composite Pavement 22
52-7.01(01) Structural 22
52-7.01(02) Functional 22
52-7.01(03) Preventative Maintenance 22
52-7.02 Asphalt Pavement 22
52-7.02(01) Structural 22
52-7.02(02) Functional 23
52-7.02(03) Preventative Maintenance 23
52-7.03 Portland Cement Concrete Pavement 23
52-7.03(01) Structural 23
52-7.03(02) Functional 24
52-7.03(03) Preventative Maintenance 24
52-7.04 Testing of Pavement 25
52-7.04(01) Falling-Weight-Deflectometer (FWD) Testing 25
52-7.04(02) Pavement Coring 25
52-7.05 Milling of Pavement 25
52-7.05(01) Asphalt Milling 26
52-7.05(02) Asphalt Scarification or Profile Milling 26
52-7.05(03) Asphalt-Removal Milling 27
52-7.05(04) PCCP Milling 27
52-7.05(05) Transition Milling 27

52-8.0 PAVEMENT DESIGN PROCEDURAL GUIDELINES 27

52-8.01 Pavement Design Engineer 28
52-8.02 Pavement Design Request 28
52-8.03 Mechanistic Empirical Pavement Design Guide (MEPDG) 28
52-8.03(01) MEPDG General Inputs 29

52-8.03(02) Flexible-Pavement-Layer Design 33
52-8.03(03) Rigid-Pavement-Layer Design 34
52-8.03(04) Unbound Granular Pavement Layer Design 37
52-8.03(05) Stabilized Pavement Layer Design 39

52-9.0 PAVEMENT CROSS SECTION DESIGN 42

52-9.01 Aggregate Pavement 43
52-9.02 HMA Pavement 43
52-9.02(01) Mixture Designation 43
52-9.02(02) QC/QA-HMA Mixtures 44
52-9.02(03) HMA Mixtures 45
52-9.02(04) PG Binder and Traffic Groups 46
52-9.02(05) Asphalt-Pavement Rehabilitation 47
52-9.02(06) Shoulders 47
52-9.02(07) [Section Deleted] 47
52-9.02(08) HMA for Approaches 47
52-9.02(09) Widening with HMA 48
52-9.02(10) Seal Coat 48
52-9.02(11) Prime Coat 49
52-9.02(12) Tack Coat 49
52-9.03 PCCP Pavement 49
52-9.03(01) PCCP Rehabilitation 50
52-9.03(02) Curbs and Shoulders 51
52-9.03(03) Reinforced-Concrete Bridge Approach (RCBA) 52
52-9.04 Composite Pavement 52
52-9.04(01) New Construction 52
52-9.04(02) Rehabilitation 52

52-10.0 UNDERDRAINS 53

52-10.01 Definitions 53
52-10.02 Existing Underdrain Perpetuation 55
52-10.03 Underdrain Warrants 55
52-10.04 Design Criteria 55
52-10.04(01) Slope 55
52-10.04(02) Size 56
52-10.04(03) Outlet Spacing 56
52-10.04(04) Location 56
52-10.04(05) Backfill 57
52-10.04(06) Outlet Protector 57
52-10.04(07) Geotextiles for Underdrain 58
52-10.04(08) Video Inspection 58
52-10.05 Contract-Document Preparation 58

52-10.05(01) Plans ... 58
52-10.05(02) Specifications ... 59
52-10.05(03) Standard Drawings ... 60
52-10.05(04) Pay Items ... 60

52-11.0 PREVENTATIVE MAINTENANCE ... 60

52-11.01 HMA PM Treatments ... 61
52-11.02 PCCP PM Treatments ... 66

52-12.0 LIFE-CYCLE COSTS ... 67

52-12.01 General Requirements ... 67
52-12.02 Definitions ... 68
52-12.02(01) Analysis Period ... 68
52-12.02(02) Discount Rate ... 68
52-12.02(03) Equivalent Uniform Annual Cost (EUAC) ... 69
52-12.02(04) LCCA Design Life ... 69
52-12.02(05) Life-Cycle Cost ... 69
52-12.02(06) Present Worth (PW) ... 70
52-12.02(07) Salvage Value (SV) ... 71
52-12.03 Analysis Steps ... 71
52-12.03(01) HMA Pavement ... 72
52-12.03(02) PCCP ... 73

52-13.0 TYPICAL PAVEMENT SECTIONS ... 73

52-13.01 HMA Pavement ... 73
52-13.02 PCC Pavement ... 73
52-13.03 Miscellaneous Pavement Sections and Details ... 73

52-14.0 PAVEMENT-DESIGN REQUEST AND INSTRUCTIONS ... 74

52-14.01 Pavement-Design Request for INDOT Project ... 74
52-14.02 Pavement-Design Request for Local Public Agency Project ... 74
52-14.03 Instructions For Completing Pavement-Design Request Form ... 74

LIST OF FIGURES

Figure No.	Title
52-6A	Dusting
52-6B	Block Cracking
52-6C	Flushing
52-6D	Longitudinal Cracking
52-6E	Raveling
52-6F	Reflective Cracking
52-6G	Rutting
52-6H	Shoulder Drop-off
52-6 I	Thermal Cracking
52-6J	Alligator or Fatigue Cracking
52-6K	Alkali-Silica Reactivity (ASR)
52-6L	Corner Break
52-6M	"D" Cracking
52-6N	Joint Failure
52-6 O	Longitudinal Cracking
52-6P	PCCP Joint-Seal Failure
52-6Q	Polishing
52-6R	Popout
52-6S	Punchout
52-6T	Transverse Cracking
52-6U	Spalling
52-7A	Preliminary HMA Pavement Thickness
52-7B	Preliminary PCCP Thickness
52-7C	[figure deleted]
52-7D	Falling-Weight-Deflectometer Testing
52-7E	Pavement Coring
52-8A	Pavement Design Life
52-8B	Performance Criteria for HMA Pavement or Overlay
52-8C	Performance Criteria for Concrete Pavement or Overlay
52-8D	MEPDG General Input Values for Asphalt Pavement
52-9A	ESAL Category for QC/QA-HMA Mixtures
52-9B	Mixture Type for HMA Mixtures
52-9C	PCCP Patching Limits
52-10A	Outlet Protector Slope Limits
52-10B	Video-Inspection Contract Quantities
52-11A	HMA PM Treatments
52-11B	PCCP PM Treatments

52-12A [figure deleted]
52-13A Full-Depth HMA Pavement with Full Depth Shoulders
52-13B Full-Depth HMA Pavement with Composite Shoulders
52-13C [figure deleted]
52-13D Full-Depth HMA Pavement
52-13E Composite HMA / Compacted-Aggregate Pavement
52-13F PCCP Mainline with PCC Shoulder
52-13G PCCP Mainline with HMA Shoulder
52-13H PCCP with Concrete Curb
52-13 I Overlay, Tilt to Crown Section
52-13J Overlay, Crown to Crown Section
52-13K Retrofit Underdrain
52-13L Underdrain for HMA Mainline with Composite Shoulders
52-13M Underdrain for HMA Mainline with Full-Depth HMA Shoulders
52-13N Concrete Curb and Gutter for HMA Pavement with Underdrain
52-13O Concrete Curb and Gutter for HMA Pavement without Underdrain
52-13P PCCP with Underdrain
52-13Q Curbed PCCP with Underdrain
52-13R Longitudinal-Joint Options for Median Side of Concrete Pavement
52-13S Full-Depth HMA Ramp
52-13T PCCP Ramp
52-13U Ramp with Overlay
52-13V HMA Pavement with Concrete Curb and Underdrain
52-13W HMA Pavement with Concrete Curb and No Underdrain
52-13X Parking-Lot Pavement Sections
52-14A Editable Pavement-Design Request – INDOT Project
52-14B Editable Pavement-Design Request – LPA Project

CHAPTER FIFTY-TWO

PAVEMENT AND UNDERDRAIN DESIGN ELEMENTS

52-1.0 INTRODUCTION

This Chapter provides guidelines for the design of pavement for the State's or a local roadway system. The pavement-type selection and thickness is determined based on an economical analysis considering subgrade conditions, environmental conditions, pavement material properties, and traffic loadings. Recent advances in technology have enabled the pavement designer to consider longer design life while staying within the economic constraints of the system. Underdrains are specified for subgrade or pavement drainage purposes.

52-2.0 HISTORY

A pavement is usually constructed of either asphalt or portland cement concrete (PCC). An asphalt pavement is referred to as a flexible pavement, and is composed of a liquid binder in combination with coarse and fine aggregates. A flexible pavement is constructed using Hot Mix Asphalt (HMA). A Portland Cement Concrete Pavement (PCCP) is referred to as a rigid pavement. An aggregate pavement is constructed with compacted aggregate. The pavement structure is considered to be that part of the road that is placed on the finished subgrade and includes all paved surfaces including shoulders.

Surfaces used for roadways in the past have included bricks, aggregates, and Kentucky rock asphalt. Bricks were commonly placed on a sand base and are still often discovered under layers of old pavement. Aggregates were a common building material when roadways first were being built and can still be found on many county roadway systems. Kentucky rock asphalt is a naturally-occurring asphalt that has not been used in recent years but can be found within an existing pavement structure when coring the roadway.

Underdrains have been utilized since the 1950s. Transverse underdrains were some of the first underdrains utilized. This type of underdrain was typically a drain tile or perforated pipe constructed perpendicular to the pavement and spaced longitudinally throughout the project. Beginning in the 1960s, longitudinal pipes were constructed along the edges of the pavement and outlet to the side ditches. Little or no maintenance was performed on the underdrain systems until a mid-1990s study showed that poor performance of the underdrain systems was causing

failures of pavement structures. INDOT has improved on the design of underdrain systems to facilitate better maintenance.

52-3.0 ABBREVIATIONS

AADT	Average Annual Daily Traffic
AADTT	Average Annual Daily Truck Traffic
AASHTO	American Association of State Highway and Transportation Officials
AC	Asphaltic Concrete
ACPA	American Concrete Pavement Association
ADA	Americans With Disabilities Act
APAI	Asphalt Pavement Association of Indiana
ASR	Alkali-Silica Reactivity
ASTM	American Society for Testing and Materials
CAB	Compacted Aggregate Base
CAP	Compacted Aggregate Pavement
CBR	California Bearing Ratio
CPR	Concrete-Pavement Restoration
CRCP	Continuously Reinforced Concrete Pavement
ESAL	18-kip Equivalent Single Axle Load
EUAC	Equivalent Uniform Annual Cost
FHWA	Federal Highway Administration
FN	Friction Number
FWD	Falling Weight Deflectometer
GPR	Ground Penetrating Radar
HMA	Hot Mix Asphalt
ICM	Integrated Climatic Module
ID	Identification
INDOT	Indiana Department of Transportation
IRI	International Roughness Index
JPCP	Jointed Plain Concrete Pavement
LCC	Life-Cycle Cost
LCCA	Life-Cycle Cost Analysis
LPA	Local Public Agency
LTE	Load Transfer Efficiency
MEPDG	Mechanistic Empirical Pavement Design Guide
NCHRP	National Cooperative Highway Research Program
NMAS	Nominal Maximum Aggregate Size
OG	Open-Graded
PCC	Portland Cement Concrete

PCCP	Portland Cement Concrete Pavement
PG Binder	Performance-Graded Binder
PM	Preventive Maintenance
PMS	Pavement Management System
PSC	Pavement Steering Committee
PV	Present Value
PVI	Point of Vertical Inflection
PW	Present Worth
QC/QA-HMA	Quality Control / Quality Assurance Hot Mix Asphalt
QC/QA-PCCP	Quality Control / Quality Assurance Portland Cement Concrete Pavement
RBL	Rich Bottom Layer
RCBA	Reinforced-Concrete Bridge Approach
RH	Relative Humidity
SMA	Stone Matrix Asphalt
SUPERPAVE	Superior Performing Asphalt Pavements
SV	Salvage Value
UBWC	Ultrathin Bonded Wearing Course
USCS	Unified Soil Classification System

52-4.0 PAVEMENT-DEVELOPMENT PROCESS

Considerations for pavement design occur during the Planning and Preliminary Design phase and Final Design phase. The pavement treatment is determined during the Planning and Preliminary Design phase. The type and thickness are determined during the Final Design phase. The existing pavement history and thickness should be determined during the Planning and Preliminary Design phase for rehabilitation projects.

52-4.01 Planning and Preliminary Design

A project such as Added Travel Lanes, Interchange Construction, Road Rehabilitation (3R or 4R Project), New Construction, or Rest-Area / Weigh-Station Construction requires that a Planning and Preliminary Design phase identify a preliminary pavement design prior to design being started. The preliminary pavement design describing the treatment and approximate thickness is to be recommended in the Planning and Preliminary Design phase.

The Program Engineering Division's Office of Pavement Engineering develops pavement recommendations based on Pavement Management System (PMS) data, testing (FWD and cores), and field visits for non-District Discretionary Program projects.

For a project within the District Discretionary Program, a pavement recommendation should be developed by the district based on an analysis of Pavement Management System data, testing (FWD and cores), and field visits. For each project within the District Discretionary Program, the district's Pavement Design Engineer will determine the pavement recommendation.

52-4.02 Final Design

The Office of Pavement Engineering designs a pavement recommendation at the request of the project designer for a non-District Discretionary Program project. The district's Pavement Design Engineer designs a pavement recommendation at the request of the project designer for a District Discretionary Program project. INDOT reviews a pavement design at the request of the LPA's agent for a LPA project. A pavement-design request should be submitted on the appropriate form for an INDOT or LPA project. An LPA's request should be prepared and signed by an Indiana professional engineer. Consideration for the use of underdrains in the pavement section should be in accordance with Section 52-10.0.

The pavement-design request form for either an INDOT or LPA project must include geotechnical recommendations and traffic data to enable the review process.

52-5.0 PAVEMENT TYPES

The types of pavement used are aggregate, asphalt, portland cement concrete, or composite.

52-5.01 Aggregate Pavement

An aggregate pavement consists of a dense-graded compacted aggregate placed on a prepared subgrade. The pavement is typically composed of compacted aggregate, size No. 53 or compacted aggregate, size No. 73.

52-5.02 Asphalt Pavement

A new asphalt pavement typically consists of a HMA surface course, on a HMA intermediate course, on either HMA base or a compacted-aggregate base, directly on a prepared subgrade. An asphalt-pavement overlay may consists of a surface course, a surface course on an intermediate course, or a surface course on an intermediate course on a base course, on either the existing pavement or a new base course.

HMA is a mixture of asphalt binder and aggregates. A drainage layer may be utilized near the bottom of a new asphalt pavement. Typical sections for HMA pavements are included in Section 52-13.0.

52-5.02(01) HMA Surface

The major function of the surface course is to limit the amount of water entering the pavement, to provide a friction course to ensure the correct friction properties throughout the design life, to provide a smooth riding surface, and to provide a structural layer to accommodate and distribute to the lower layers the anticipated design traffic loads. The surface layer normally includes the highest quality materials among the HMA layers.

52-5.02(02) HMA Intermediate

The major function of the intermediate course is as a leveling course to create a smooth pavement, and a structural course to accommodate and distribute to the lower layers the anticipated design traffic loads. The intermediate layer consists of a structural HMA layer placed below the surface layer and above the base layer.

52-5.02(03) HMA Base

The base course is designed as a structural layer to accommodate the anticipated design traffic loads concurrent with its role in handling or keeping water out of the pavement system and isolating the subgrade. Base material is a dense graded, practically impermeable mixture. The base layer consists of one or more HMA lifts.

52-5.02(04) Open-Graded Drainage Layer

If open-graded drainage layers are required, QC/QA-HMA 5, 76, Intermediate, OG25.0 mm; or QC/QA-HMA 5, 76, Intermediate, OG19.0 mm are used as a conduit to remove water entering the pavement system, and as structural layers to help carry the anticipated design traffic loads. If open-graded mixtures are specified, underdrains should be included.

52-5.02(05) Rich Bottom Layer

A Rich Bottom Layer (RBL) is a bottom HMA layer of a flexible, fatigue-resistant material to resist bottom-up cracking. RBL is a HMA layer with base course gradation and increased asphalt content by 0.5%. RBL increases fatigue resistance of the mixture.

52-5.02(06) Compacted Aggregate Base

Compacted aggregate base, where used, functions as a structural layer while economically increasing the pavement thickness to help protect the pavement from the effects of frost action.

52-5.03 Portland Cement Concrete Pavement

Plain jointed Portland Cement Concrete Pavement (PCCP) consists of concrete materials on subbase on a prepared subgrade. PCCP is composed of portland cement, pozzolanic materials, coarse and fine aggregates, water, and chemical admixtures.

Subbase is a granular layer placed under PCCP to prevent pumping of erodable subgrade material and to provide support for the pavement. Subbase may be classified as drainable or dense. A drainable subbase provides a conduit to remove water that enters the pavement system and should be used for pavement where underdrains are required. A dense subbase provides for a stable-working platform together with support for the pavement without drainage layers.

1. Drainable Subbase. A drainable subbase consists of an open-graded aggregate drainage layer over a dense graded compacted aggregate separation layer.

2. Drainable Stabilized Subbase. A drainable stabilized subbase consists of an asphalt-stabilized or cement-stabilized layer over a dense graded separation layer. Mixtures such as QC/QA-HMA 5, 76, Intermediate, OG19.0 mm may be used as an asphalt-stabilized open-graded layer. A mixture of cement and open-graded coarse aggregate, size No. 8 may be used as a cement-stabilized open-graded layer. The dense graded separation layer may consist of dense graded HMA or coarse aggregate, size No. 53.

3. Dense Subbase. A dense subbase consists entirely of dense graded compacted aggregate such as coarse aggregate, size No. 53.

52-5.04 Composite Pavement

A composite pavement consist of multiple pavement types, i.e., HMA over PCC Base, PCCP over asphalt, asphalt/PCC composite pavement, or HMA over compacted aggregate base. A

composite pavement may be used in widening where the existing pavement is considered to be in satisfactory condition. The widened pavement will match the existing sections of the existing pavement. A composite pavement should be designed in accordance with Section 52-9.04.

52-5.05 Subgrade

Subgrade is the upper portion of roadbed upon which the pavement structure and shoulders are to be constructed. Each new pavement, reconstructed pavement, or widening should have a subgrade treatment.

Subgrade should be prepared in accordance with recommendations from the Office of Geotechnical Engineering and the INDOT *Standard Specifications*.

52-6.0 PAVEMENT-SURFACE DISTRESSES

The strengths and limitations of each pavement system must be understood prior to designing a pavement. Common pavement weaknesses, distresses, and their causes and recommended treatments are listed below.

52-6.01 Aggregate Pavement

1. Dusting. Dusting, as shown in Figure 52-6A, is caused by the displacement of road fines by traffic causing a cloud of dust behind user vehicles. The recommended treatment for dusting is to use a dust palative.

2. Potholing. Potholing is caused by traffic displacing weakened areas of the unbound pavement. Insufficient structural strength, segregation in the aggregate surface, or soft subgrade conditions cause the weakened areas. The recommended treatment for isolated potholes is regrading and compacting the surface. However, the recommended treatment for numerous potholes in the pavement requires additional aggregate to be placed on the roadway prior to regrading and compacting.

3. Rutting. Rutting is caused by traffic displacing the unbound aggregate outside the wheel paths or to the sides of the road. The recommended treatment is to regrade and compact the roadway to replace the displaced aggregate. In a severe situation, the placement of additional aggregate may be required prior to regrading and compacting.

4. Washboarding. Washboarding or corrugations develop across the road perpendicular to the direction of traffic. The primary causes of washboarding are too-fast driving habits, lack of moisture, and poor quality aggregates. It is most prevalent under heavy loads or where traffic accelerates or decelerates. The recommended treatment for light washboarding is to correct it by regrading and compacting the roadway. The recommended treatment for moderate to severe washboarding is milling 25 to 50 mm below the depth of the corrugations, adding water, then regrading and compacting. Compacted aggregate, size No. 53 or size No. 73 should be selected to resist washboarding.

52-6.02 Asphalt Pavement

1. Block Cracking. Block cracking, as shown in Figure 52-6B, is a non-load-related distress that cracks the pavement into blocks that range in size from 0.1 m^2 to 9 m^2. Block cracking is caused by hardening of the pavement combined with temperature cycling. On a pavement with 4 or more lanes, block cracking can only occur in the passing lane as it is a non-load-related distress. Traffic loadings in the travel lane tend to relieve the stresses. The recommended treatment for block cracking is to remove the existing surface course by asphalt milling 25 to 40 mm and overlay the milled surface.

2. Flushing. Flushing, as shown in Figure 52-6C, is defined as free binder or binder and fine aggregate mastic which migrates to the surface of the pavement forming darkened areas principally in the wheel paths. Severe flushing creates a tacky surface and may run downhill. Flushing may occur due to excessive binder or moisture, low air voids in the mix, or stripping. The recommended treatment for a flushed area is to mill the mixture causing the flushing prior to overlaying of the pavement. Asphalt milling to the depth of the mixture causing the flushing should be completed prior to overlaying.

3. Frost Heave. Frost heave is defined as the differential displacement of the surface if a frost-sensitive subgrade freezes. Frost heave is accentuated by moisture in the subgrade/subbase. A surface allowing a large amount of water due to low density/high voids, segregation, etc., to enter the pavement structure with a frost-susceptible soil is prone to frost heave. Frost heave dissipates during the spring once the subgrade/subbase thaws. Future occurrences of frost heave may be lessened by covering the surface to minimize the amount of water entering the pavement system.

4. Longitudinal Cracking. Longitudinal cracks, as shown in Figure 52-6D, are cracks in the pavement surface that are parallel to the centerline of the roadway. Longitudinal cracks may be caused by cracks reflecting through a pavement surface, poor paver controls during construction, poor construction practice at longitudinal joints, or by wheel

loadings. The recommended treatment for longitudinal cracking is to seal, rout and seal, or in a severe situation, remove and replace the distressed area.

5. Polishing. Polishing is caused by the abrasion of the surface to the extent that the pavement surface becomes slick. Polishing of the surface aggregate is traffic dependent. The INDOT *Standard Specifications* allow only certain types of aggregates for surface courses dependent on the number of ESALs specified. The recommended treatment for a polished surface is either to remove the polished areas by scarification or profile milling prior to placing an overlay or to apply a surface treatment as described in Section 52-11.0.

6. Raveling. Raveling, as shown in Figure 52-6E, is the loss of aggregate from the upper pavement layer exposed to traffic. Raveling may be caused by insufficient binder material, insufficient compaction, or segregation of the mixture during construction of the pavement. The recommended treatment for severe raveling is to remove the surface course by asphalt milling 25 mm or 40 mm prior to placing an overlay. The recommended treatment for moderate raveling is to scarify or mill 25 mm and overlay the roadway. The recommended treatment for minor raveling at isolated locations is to seal the raveled area.

7. Reflective Cracking. Reflective cracks, as shown in Figure 52-6F, are those cracks that have developed in an overlay resulting from the movement of the joints and cracks in the underlying pavement. Cracking occurs once the movement of the underlying pavement exceeds the elasticity of the overlay resulting in the migration of the crack pattern from the underlying pavement to the surface of the pavement. An extremely low temperature or a sudden drop in temperature can create tensile stresses in the pavement beyond the tensile properties of the binder material. Differential movement at the existing crack as traffic travels across the crack increases the stress in the overlay. If reflective or transverse cracking is left unchecked, the pavement adjacent to the area of the cracks will further deteriorate by raveling or stripping, and will result in a rough riding surface.

   For high-severity reflective cracking, an appropriate slab reduction technique such as crack-and-seat or rubblization should be considered to minimize the movement of the PCC base from traffic loadings. The recommended treatment for moderate- to high-severity occurrences of reflective cracking include sawing or routing and resealing the existing cracks, or asphalt removal milling and placement of an overlay. The recommended treatment for low-severity reflective cracking is to seal the cracks with a sealant material to minimize the intrusion of water. Undersealing may be used depending on falling weight deflectometer (FWD) test results. However, undersealing is not used with slab reduction techniques.

8. Rutting. Rutting, as shown in Figure 52-6G, is longitudinal deformation of the pavement in the wheel tracks. Rutting is the result of an improper mix design, poor compaction, a soft subgrade, or stripping (water damage) in the underlying layers of the pavement. The recommended treatment for rutting is to mill and replace the deformed material. The type of milling specified is dependent on field measurements. Scarification or profile milling is used for minor rutting of less than or equal to 6 mm. Asphalt milling is used for severe rutting of greater than 6 mm. For rutting less than or equal to 13 mm, preventative-maintenance alternatives listed in Section 52-11.0 may be considered.

9. Shoulder Drop-off. Shoulder drop-off, as shown in Figure 52-6H, is the difference in elevation between the driving lanes and the shoulders due to settlement or erosion. The recommended treatment for a severe shoulder drop-off of greater than 25 mm is to fill in the depressed area with HMA patching materials or compacted aggregate, size No. 73.

10. Stripping. Stripping is the debonding of the binder film from the aggregate. Visible signs of stripping include surface delamination, raveling, potholing, or surface discoloration. Stripping is an aggregate-dependent distress caused by a combination of heat, pressure, and water. Sources of heat, water, and pressure are rain, summer sun, or heavy trucks. The recommended treatment for stripping is to remove the stripped material by asphalt milling and then to overlay the milled surface.

11. Thermal Cracking. Thermal cracking, as shown in Figure 52-6 I, is transverse cracking of a pavement. The cause of thermal cracking is due to binder material that was originally too hard or has age-hardened. The recommended treatment for severe thermal cracking is to remove the surface course by asphalt milling 25 mm or 40 mm prior to placing an overlay. Minor to moderate areas of thermal cracking should be sealed.

12. Alligator or Fatigue Cracking. Alligator or fatigue cracking, as shown in Figure 52-6J, occurs with repeated traffic loadings and is considered to be a structural failure of pavement. The cracking is best described as spider-web-type cracking on the surface of the pavement and occurs in the wheel paths. The recommended treatment for the cracking is to remove and replace the failed area with adequate structure and then place an overlay on the pavement.

13. Weathering. Weathering consists of hardening and loss of binder material due to oxidation. The hardening and the loss of the binder material may allow the displacement of aggregate particles from the riding surface similar to raveling. The recommended treatment for this distress is to seal coat or overlay the surface.

52-6.03 Concrete Pavement

1. Alkali-Silica Reactivity (ASR). ASR, as shown in Figure 52-6K, occurs if silica in the aggregates and alkali in the cement react in the presence of water to form a gel-like substance. The gel-like substance absorbs moisture and swells, causing the concrete surface to crack in a map-like pattern. During later stages of ASR distress, the surface will begin to spall. The recommended treatment for pavement in advanced stages of ASR distress is an overlay. A slab-reduction technique such as crack-and-seat or rubblization should be considered for a high-traffic-volume road in accordance with the INDOT *Standard Specifications*.

2. Blowup. A blowup is an isolated and sudden elevation change along the profile of the roadway. A severe blowup occurs if adjacent panels rise off the ground in a tentlike manner. A blowup is caused by the buildup of compressive stresses in the pavement due to the infiltration of incompressible materials into the joints and the growth and expansion of the PCCP. A blowup occurs at a transverse crack or joint that is not wide enough to accommodate the expansion of the concrete slab. Some coarse aggregates exposed to freeze-thaw conditions in the presence of free moisture will influence the growth of the concrete pavement. Also, buildup of water within the pavement structure acts as a lubricant and catalyst for a blowup to occur. The recommended treatment for repairing a blowup is to remove the affected area and patch with PCCP patching.

3. Corner Break. A corner break, as shown in Figure 52-6L, is a random diagonal crack at the intersection of transverse and longitudinal joints. A corner break is caused by load repetition in combination with loss of support, poor load transfer across joints or thermal curling, or moisture-warping stresses. The recommended treatment for a corner break is to remove the affected area for a full lane width and patch with PCCP. A pavement with numerous corner breaks should be rehabilitated by using a slab-reduction technique and an overlay.

4. "D" Cracking. "D" cracking, as shown in Figure 52-6M, occurs at a transverse joint caused by the expansion of the aggregate in PCCP. “D” cracking is caused by an expansive coarse aggregate in the PCCP under freeze-thaw conditions, and starts near the bottom of the slab and progresses up through the concrete. Symptoms of "D" cracking in jointed PCCP are spiderweb cracks at the transverse joints. "D" cracking detected at a surface location indicates that other locations are also "D" cracking. The recommended treatment for PCCP with "D" cracking is to use a slab-reduction technique and an overlay.

5. Faulting. Faulting is a differential in elevation of two adjacent slabs. Faulting can occur at a joint or at a random transverse crack in PCCP. Faulting is caused by a loss of

aggregate or mechanical load transfer and the loss of support or the build-up of material under one of the slabs, causing the slabs to be displaced relative to each other. The recommended treatment for an isolated faulted area is to remove the affected area and patch with PCCP patching, or to use retrofit dowel bars while reestablishing subgrade support and correcting the surface profile. A pavement with significant faulted areas should be rehabilitated by using a slab-reduction technique and an overlay.

6. Joint Failure. Joint failure occurs in a contraction joint that has cracked or spalled, or does not perform as desired. A joint failure is caused by misaligned dowel bars during construction or by fatigue from repetitive loads. The recommended treatment for localized joint failure is to remove the affected area and patch with PCCP patching. A pavement with significant areas of joint failure should be rehabilitated by using a slab-reduction technique and an overlay.

7. Longitudinal Cracking. A longitudinal crack, as shown in Figure 52-6 O, is a random crack oriented predominantly along the pavement. A longitudinal crack may occur because of the loss of support or the improper sawing of the joints. Longitudinal cracking is detrimental because it allows water flowing across the pavement to enter the pavement structure. An isolated area of longitudinal cracking should be repaired in accordance with the INDOT *Standard Specifications*. PCCP with excessive areas of longitudinal cracking should be rehabilitated by using a slab-reduction technique and an overlay.

8. PCCP Joint-Seal Failure. Joint-seal failure, as shown in Figure 52-6P, consists of the loss of adhesion between the seal material and the joint faces, puncturing of the seal material, or displacement of the seal material. The recommended treatment for failed seal material is to remove the existing joint-seal material, clean the joint faces, and reseal the joint.

9. Polishing. Polishing, as shown in Figure 52-6Q, is caused by the abrasion of the surface to the extent that the surface becomes slick. Polishing is traffic-dependent. The recommended treatment for a polished surface is to profile the PCCP surface or PCCP mill and overlay.

10. Poor Rideability. Poor rideability is the result of a roughened pavement caused by poor construction techniques, unstable subgrade, or the deterioration of the riding surface. Poor ride quality can be corrected by profiling the surface if no other distresses are present in the pavement structure. Appropriate rehabilitation or reconstruction techniques should be considered if other distresses are present.

11. Popout. A popout, as shown in Figure 52-6R, is a small hole, 13 to 40 mm diameter, in the pavement surface. A popout is caused by soft or deleterious aggregate material in the

PCCP surface that disintegrates in the presence of water in freeze-thaw conditions. A popout is considered an aesthetic problem and is not detrimental to the pavement's performance. A popout is not specifically repaired.

12. Punchout. A punchout, as shown in Figure 52-6S, is a failure in a continuously-reinforced-concrete pavement (CRCP) caused by insufficient structural strength at a localized area. This failure appears as a depression or hole in the pavement where longitudinal cracks have intersected transverse cracks. The recommended treatment for a localized punchout is to remove the affected area for the full lane width and patch with PCCP patching. A pavement with significant areas of punchouts should be rehabilitated by using a slab-reduction technique and an overlay.

13. Transverse Cracking. A transverse crack, as shown in Figure 52-6T, is a random crack oriented predominantly across the pavement away from the planned joint locations. Transverse cracking is caused by poor construction techniques or improper joint spacing. Poor support, a poor mix design, improper mixture, improper subbase placement, or untimely sawing of the pavement can also cause random transverse cracking. The recommended treatment for high-severity transverse cracking is to remove and replace the affected area, or a slab-reduction technique and an overlay. The recommended treatment for medium-severity or low-severity transverse cracking is to install retrofit load transfer with dowel bars.

14. Scaling. Scaling is the local flaking or peeling of a finished surface of hardened concrete as a result of freezing and thawing. Scaling may be caused by improper mix design, over-finishing during construction, or improper curing and the application of excessive or detrimental deicing chemicals. The recommended treatment for severe scaling is either to mill the surface and overlay the pavement or to correct by PCCP profiling. Moderate scaling is not repaired.

15. Spalling. Spalling, as shown in Figure 52-6U, is the raveling of concrete at a joint face or at steel reinforcement. Spalling may be due to improper sawing, improper concrete curing, excessive stresses at the joint, or poor installation of load-transfer devices. The recommended treatment for severe spalling is to patch the affected area and replace the joint material. Moderate spalling is patched with asphalt material.

16. Structural Failure. Structural failure is a load-related distress indicated by map cracking of the entire pavement and is caused by insufficient thickness. The recommended treatment for structural failure is either to use a slab-reduction technique and an overlay or to replace the pavement.

52-7.0 PAVEMENT-DESIGN COORDINATION

Each INDOT- or LPA-proposed project is evaluated for pavement treatment. Project intent may be driven by non-pavement issues such as budget constraints, capacity, safety, drainage, short or long term needs, truck loadings, geometric deficiencies, ADA compliance costs, or utility costs. The intended project intent and its impacts on the existing or new pavement structure should be understood prior to developing the pavement-treatment recommendation. Pavement distresses described in Section 52-6.0 should be considered in determining the appropriate treatment for the project. Additional pavement investigation, i.e., core analysis, FWD, Ground Penetrating Radar (GPR), surface friction tests, condition survey, etc., of an existing pavement may be required to determine the appropriate pavement treatment including requirements for the milling of the existing pavement.

A pavement-replacement project includes removal of the existing pavement structure, including subbase, and preparation of the subgrade prior to placing a new pavement structure. Pavement damaged due to structural deficiencies should be considered for replacement. A pavement that is structurally sufficient is a candidate for a rehabilitation-type project such as a preventative-maintenance or functional-overlay. All work being proposed for a project, i.e., utilities, added travel lanes, curve corrections, ADA compliance, etc., should be considered in evaluating the existing pavement.

A Functional pavement treatment utilizes the existing pavement structure to significantly extend the service life of an existing pavement. The pavement work on a rehabilitation project may include milling of the existing pavement, PCCP slab reduction, the placement of an overlay, or a combination of these elements.

A Preventative Maintenance (PM) pavement treatment is intended to preserve and extend the service life of an existing pavement. The geometric design of the project should be designed in accordance with Chapter Fifty-six. The pavement work on a PM project extends the riding and surface service lives of the pavement. PM work includes preventative maintenance and pavement treatments as described in Section 52-11.0.

A preservation treatment is intended to keep the pavement in a nearly new condition and is performed prior to distresses becoming evident in the pavement structure. Preservation work is described in Section 52-11.0.

The pavement design for a public-road-approach pavement should be in accordance with the INDOT *Standard Drawings.* An individual pavement recommendation for a public road approach is required only where the AADT and the number of trucks exceed the values listed in the INDOT *Standard Drawings*.

Individual pavement recommendations are not required for a bridge-overlay project. A HMA wedge to compensate for the bridge-overlay grade raise should be specified with HMA mixtures in accordance with Figure 52-9B, Mixture Type for HMA Mixtures.

52-7.01 Composite Pavement

52-7.01(01) Structural

A structural treatment will consist of a Base course, or courses, an Intermediate course, and a Surface course. The placement of the Base course should be preceded by milling. The pavement should be designed in accordance with Section 52-9.0.

52-7.01(02) Functional

A functional treatment consists of an Intermediate course and a Surface course. The placement of the Intermediate course should be preceded by scarification and profiling or by milling. The pavement should be designed in accordance with Section 52-9.0.

52-7.01(03) Preventative Maintenance

The PM treatments commonly used for a composite pavement are described in Section 52-11.0.

52-7.02 Asphalt Pavement

52-7.02(01) Structural

A HMA structural treatment will consist of a Base course, an Intermediate course, and a Surface course, with milling of the existing pavement. The pavement should be designed in accordance with Section 52-9.0.

1. New. A preliminary pavement thickness as shown in Figure 52-7A will be used during the Planning and Preliminary Design phase of the project.

2. Replacement. A statement should be made that the existing pavement structure must be removed and replaced. The preliminary pavement thickness for a replacement project will be as shown in Figure 52-7A.

3. Strengthening. A structural treatment of an asphalt pavement strengthens the existing structure to current design requirements and restores the pavement smoothness to a new condition.

52-7.02(02) Functional

A functional-treatment project will include milling of an existing asphalt pavement and a functional overlay. The preliminary pavement recommendation will include an approximate depth of milling and overlay.

A functional overlay of an asphalt pavement restores pavement smoothness to near-new condition on structurally-sufficient pavement.

A HMA functional treatment consists of an Intermediate course and a Surface course. The placement of the Intermediate course should be preceded by milling. The pavement should be designed in accordance with Section 52-9.0.

52-7.02(03) Preventative Maintenance

A PM treatment is intended to arrest light deterioration, retard progressive damage, and reduce the need for routine maintenance. The proper time for PM is before the pavement experiences severe distress, structural problems, and moisture or aging-related damage. These activities can be cyclical in nature and may correct minor deficiencies.

The HMA PM treatments most commonly used are described in detail in Section 52-11.0.

52-7.03 Portland Cement Concrete Pavement

52-7.03(01) Structural

A structural treatment of a PCCP strengthens the existing structure to current design requirements and restores the pavement smoothness to a new condition.

A PCCP with structural failure may be rehabilitated with slab-reduction techniques like cracking and seating or rubblization and overlay or PCCP unbonded overlay. Where rubblization is utilized as a slab-reduction technique, the preliminary pavement design should state that a geotechnical investigation and traffic data are required. For a rubblization project, the

preliminary thickness for the HMA overlay will vary from 175 to 300 mm on rubblized concrete pavement or PCCP unbonded overlay.

1. New. A preliminary pavement thickness as shown in Figure 52-7B will be used during the Planning and Preliminary Design phase of the project.

   PCCP is always placed on either dense graded subbase or subbase for PCCP.

2. Replacement. A statement should be made that the existing pavement structure must be removed and replaced. The preliminary pavement thickness for a replacement project will be as shown in Figure 52-7B.

52-7.03(02) Functional

A functional treatment of a PCCP restores pavement smoothness to near-new condition on structurally-sufficient pavement.

A PCCP functional treatment may consist of Concrete Pavement Restoration (CPR) to be used to correct functional distresses. CPR may consist of crack sealing, partial or full depth patching, resealing of joints, undersealing, PCCP profiling, or retrofit dowel bars. A functional HMA overlay may also be used. A HMA functional treatment consists of an Intermediate course and a Surface course. The placement of the Intermediate course should be preceded by milling. The pavement should be designed in accordance with Section 52-9.0.

For a concrete pavement where a slab-reduction technique is not used, the preliminary pavement design should include elements required to correct the surface deficiencies including milling and overlay requirements.

52-7.03(03) Preventative Maintenance

A PM treatment is intended to arrest light deterioration, retard progressive damage, and reduce the need for routine maintenance. The proper time for PM is before the pavement experiences severe distress, structural problems, or moisture or aging-related damage. These activities can be cyclical in nature and may correct minor deficiencies.

The PCCP preservation treatments most commonly used are described in detail in Section 52-11.0.

52-7.04 Testing of Pavement

52-7.04(01) Falling-Weight-Deflectometer (FWD) Testing

The pavement designer should evaluate the need for FWD testing pertaining to concrete, asphalt, or composite pavement. The FWD data is used to evaluate the structural adequacy of an existing pavement section, to evaluate pavement shoulder adequacy for temporary traffic, or to provide an estimated quantity of underseal to be included in the plans for PCCP over dense graded subbase. The INDOT Deflection Testing Request Form is available on the Department's website at http://rebar.ecn.purdue.edu/Indot_Research_Division/Intranet/deflection%20testing%20form. FWD testing is illustrated in Figure 52-7D.

52-7.04(02) Pavement Coring

The pavement designer should evaluate the need for pavement coring. If cores are required, the information should be requested in advance of the date it is required for project development. Cores must be obtained during non-freezing temperature periods due to equipment and safety concerns. Pavement coring is illustrated in Figure 52-7E.

52-7.05 Milling of Pavement

An asphalt or concrete pavement may be milled to remove distressed layers of material, make crown corrections, maintain curb height or vertical clearance, scarify existing surface, surface profiling, removal of asphalt overlay, or to provide a pavement transition in accordance with the INDOT *Standard Specifications*. The types of milling of pavements and their usages are as follows.

1. Asphalt Milling. This is used to remove distresses near the surface of the pavement or prior to placing a HMA inlay.

2. Asphalt Scarification or Profile Milling. This is used to roughen the surface or remove excessive crack sealant prior to placing a HMA overlay.

3. Asphalt-Removal Milling. This is used to remove asphalt materials down to a concrete or brick base.

4. PCCP Milling. This is used to roughen the existing surface or to provide crown or profile corrections prior to placing an overlay.

5. Transition Milling. This is used to provide a transition to an adjoining section.

52-7.05(01) Asphalt Milling

Asphalt milling is intended to remove material from an existing pavement to a specified average depth by milling the surface and creating a uniform profile. An average depth of milling should be specified depending on the condition of the pavement or project requirements. Asphalt milling is used as follows:

1. prior to placing a HMA inlay;

2. removal of stripped or distressed asphalt;

3. correction of substandard cross slope or crown condition;

4. profile correction; or

5. maintaining vertical clearance or curb height.

The average milling depth specified will be sufficient to accommodate the HMA inlay or the removal of distressed materials. The average milling depths to be used will be 25, 40, 50, 75, or 100 mm.

For a variable milling depth to correct a cross-slope deficiency, the limits and associated milling depth must be shown on the typical cross sections in accordance with Section 52-13.0.

52-7.05(02) Asphalt Scarification or Profile Milling

Asphalt scarification or profile milling is used to provide a roughened texture to an existing surface. Asphalt scarification or profile milling will remove crack sealant to prevent slippage of the overlay materials, roughen the existing surface that has polished due to traffic, or correct minor profile or cross-slope deficiencies. Correction of minor cross-slope deficiencies is limited to a 4-mm average rut depth as determined by the INDOT Pavement Management System. Milling operations to correct pavement conditions that require deeper milling should be in accordance with Section 52-7.05(01).

Asphalt scarification or profile milling is used to prepare an existing pavement for a single-course HMA overlay. Asphalt scarification or profile milling is used to prepare an existing

pavement for a functional overlay if the existing pavement has excessive crack sealant or requires minor profile corrections.

52-7.05(03) Asphalt-Removal Milling

Asphalt-removal milling is used to remove an entire asphalt overlay from a concrete or brick base. The designer will designate the approximate existing asphalt thickness on the typical cross sections.

52-7.05(04) PCCP Milling

PCCP milling is intended to remove material from an existing PCCP to a specified average depth to create a uniform profile. An average depth of milling should be specified depending on the condition of the pavement or project requirements. PCCP milling is used as follows:

1. correction of substandard cross slope or crown conditions;

2. profile corrections;

3. maintaining vertical clearance or curb height; or

4. preparation for a HMA overlay.

The designer will designate the average milling depth on the typical cross sections. For a variable milling depth to correct a cross-slope deficiency, the limits and associated milling depths must be shown on the typical cross sections in accordance with Section 52-13.0.

52-7.05(05) Transition Milling

Transition milling is used to provide a connection between a HMA overlay and an adjoining pavement, drive, paving exception, or public-road approach. The transition slope and notch depth in the existing asphalt or concrete pavement will be in accordance with the INDOT *Standard Drawings*.

52-8.0 PAVEMENT DESIGN PROCEDURAL GUIDELINES

The Pavement Design Engineer should determine the pavement type and thickness of the pavement layers of the pavement structure based on subgrade conditions, materials, traffic, environment, and economic consideration. The Pavement Design Engineer is also responsible for specifying HMA mixture properties for a project.

52-8.01 Pavement Design Engineer

The Program Engineering Division's Office of Pavement Engineering prepares the pavement design for each non-District Discretionary Program project. The district Pavement Design Engineer prepares pavement designs for the District Discretionary Program. The Office of Pavement Engineering's Pavement Design Engineer is available for consultation with each district.

For an LPA project, the LPA's agent prepares pavement recommendations for the pavement design if federal funding is involved.

52-8.02 Pavement Design Request

A pavement design request is submitted to the Pavement Design Engineer for each non-District Discretionary Program project. For a District Discretionary Program project, the pavement design request is submitted to the district's Pavement Design Engineer. Each submittal should be prepared on Figure 52-14A, Pavement Design Request - INDOT Project, in accordance with Section 52-14.0. Instructions for the completion of the form are included in Section 52-14.0. Each District Discretionary Program project will be reviewed by the Pavement Steering Committee.

A pavement recommendation for a LPA project utilizing federal funds designed by the LPA or its agent should be submitted to the Pavement Design Engineer for approval. The proposed pavement design should be prepared on Figure 52-14B, Pavement Design Request - LPA Project, in accordance with Section 52-14.0. Instructions for the completion of this form are included in Section 52-14.0. A hardcopy of the MEPDG software output used to design the pavement should be submitted with the form.

52-8.03 Mechanistic Empirical Pavement Design Guide (MEPDG)

The MEPDG, AASHTO's pavement design guide, should be used for the design of each pavement structure. The design process is based on the predictive performance of a pavement section to be designed to predefined parameters identified as failing. The pavement design itself

is an iterative process where the pavement designer selects a cross section for the pavement based on economic benefits, performance, maintenance, and constructability. The objective of pavement design using the MEPDG process is to make iterative inputs to the input parameters identified as important and critical, process the inputs to determine the pavement performance prediction, and compare the pavement-performance prediction with a preset performance requirement. Therefore, more than one design may satisfy the preset performance requirement. The final design must satisfy the performance-indicator criteria (threshold value) and design reliability level for the project and be economically justified.

Below are the recommended factors and inputs to be used with the MEPDG. The organization of the factors and inputs is based on the sections of the MEPDG software.

52-8.03(01) MEPDG General Inputs

1. General Information.

   a. Design Life, Years. See Figure 52-8A, Pavement Design Life, for pavement performance periods.

   b. Base/Subgrade Construction Month. This is the month and year of the scheduled construction of the base or subgrade. This input is only for a HMA pavement and is an important parameter used to calculate the predictive performance of the pavement. For an INDOT project, it is to be assumed that the base or subgrade will be constructed in May.

   c. Pavement Construction Month. This is the month and year of the scheduled placement of the HMA or PCCP. This input is an important parameter used to calculate the predictive performance of the pavement. For an INDOT project, it is to be assumed that the pavement will be constructed in July.

   d. Traffic Open Month: This is the month and year of the scheduled opening to traffic upon finishing the project. This input is an important parameter used to calculate the predictive performance of the pavement. For an INDOT project, it is to be assumed that the pavement will be opened to traffic in September.

2. Site and Project Identification.

   a. Location, Project ID, Section ID, and Date. These parameters are optional parameters, but should be included for each specific design. Example: Location =

SR 14 in Allen County, Project ID = Des No. 9700260, Section ID = SR 14 from Scott Road to I-69 Ramps, Date = date of analysis.

b. Station or Mile Post Format. Reference format of the design project for use with the MEPDG to calculate the pavement performance. This input parameter is optional, but should be included for each specific design. The recommended input is kilometer.

c. Station or Mile Post Begin. Station or Mile Post/Reference Post at the beginning of the project. This is an important parameter used for MEPDG to calculate the performance criteria. Example: RP 120.54.

d. Station or Mile Post End. Station or Mile Post/Reference Post at the end of the project. This is an important parameter used for MEPDG to calculate the performance criteria. Example: RP 122.78.

e. Traffic Direction: Direction of the design lane. This is an important parameter used for MEPDG to calculate the performance criteria. Example: Northbound.

3. Analysis Parameter. The input parameters in this section are important and sensitive to the analysis and the final design of the project.

a. Initial IRI (mm/km). This is the predictive International Roughness Index for newly-constructed pavement. A typical value is from 1030 to 1190 mm/km. A default value is 1100 mm/km.

b. Performance Criteria for Pavement Design. These are the performance criteria used for acceptability of the iterative trials. These parameters are the most important parameters, as additional parameters included in the MEPDG software are optional. For asphalt pavement, this information is shown in Figure 52-8B. For concrete pavement, this information is shown in Figure 52-8C.

4. Traffic Inputs. Determine Traffic Group A, B, C, or D from item 5.a. below. Prior to importing the AADTT and other inputs such as the number of lanes in the design direction, etc., import the site-specific Traffic Group data from the Traffic Input files.

5. Standard Traffic-Distribution Input Files. These are available to an INDOT designer on the Y:\ network drive, Program Engineering Division folder, MEPDG file. The information is also available to a LPA's designer on the Department's website. The user of the MEPDG software will be able to import the Traffic Volume Adjustment, Axle Load Distribution Factor, and the General Traffic Inputs.

a. Initial Two-Way AADTT. This value is the Average Annual Daily Truck Traffic after the roadway is opened to traffic or the rehabilitation has been completed. It represents both directions and all lanes. Traffic is divided into four groups, based on the AADTT, as follows:

(1) Traffic Group A, AADTT ≤ 3,000
(2) Traffic Group B, 3,000 < AADTT ≤ 6,000
(3) Traffic Group C, 6,000 < AADTT ≤ 20,000 AADTT)
(4) Traffic Group D, AADTT > 20,000

b. Number of Lanes in Design Direction. This is the number of traveled lanes, not including the acceleration lanes.

c. Percent of Trucks in the Design Direction. This value represents the percentage of trucks in the design direction relative to all trucks using the roadway in both directions. The recommended values are as follows:

(1) 2-Lane Road, 52%
(2) 4-Lane Road, 55%
(3) 6-Lane Road, 55%
(4) 8-Lane Road, 57%
(5) 10-Lane Road, 55%
(6) 12-Lane Road, 54%
(7) One-way Ramp or Street, 100%

d. Percent of Trucks in the Design Lane. This value represents the percent of trucks of FHWA Class 4 and above in the design lane relative to all trucks of FHWA Class 4 and above in the design direction.

(1) 2-Lane Road, 100%
(2) 4-Lane Road, 90%
(3) 6-Lane Road, 60%
(4) 8-Lane Road, 45%
(5) 10-Lane Road, 40%
(6) 12-Lane Road, 40%
(7) 1-Lane Ramp or Street, 100%
(8) Multi-Lane Ramp, 90%
(9) Multi-Lane One-Way Street, 90%

e. Operational Speed. This value represents the posted truck speed limit. The posted speed limit should be used for all traffic groups.

f. Traffic Growth. This value represents the growth of truck traffic during the pavement life. Assuming that the growth rate is independent over time, the rate of increase remains the same throughout the design period. If the 20-year projected AADTT is known, the growth factor is calculated using the equation as follows:

$$Growth\,Factor = \left(\frac{Design\,Year\ AADTT}{Current\ Year\ AADTT} \right)^{0.05} - 1$$

The recommended growth method is compounded growth. The project-specific Traffic Growth Factor should be used.

If the specific Traffic Growth Factor is not available, the default values are as follows:

(1) Traffic Group A, 2.8%
(2) Traffic Group B, 3.0%
(3) Traffic Group C, 3.3%
(4) Traffic Group D, 3.3%

5. Climate. The climate inputs in the MEPDG are based on the project location. A climatic data file must be generated for each pavement design project in the MEPDG. There are 11 specific climate inputs from 11 weather stations in Indiana, and most are in major cities. For a project outside one of these specific locations, a pavement designer can generate a climatic-data file.

6. Generate New Climatic-Data File. This option is available to generate a climatic-data file for a project.

a. Climatic Data for a Specific Weather Station: This option is available for a project that is in the vicinity of one of the 11 weather stations.

b. Depth of Water Table. Use a default value of 1.5 m.

c. Interpolate Climatic Data for a Given Location. For a project that is not located close to one of the 11 weather stations, latitude, longitude, and elevation are needed to generate a climatic-data file. At least three weather-station locations in the MEPDG should be selected to generate a climatic-data file. Save the site-specific weather data.

52-8.03(02) Flexible-Pavement-Layer Design

A flexible-pavement system consists of HMA (Surface, Intermediate, and Base) on an unbound base layer or prepared subgrade. A final pavement-structure design in the MEPDG should include all of the layers shown in the Figure 52-13 series typical pavement sections. Iterative runs in the MEPDG should be conducted to minimize the HMA Base thickness while satisfying the pavement performance prediction for the design life.

Each flexible-pavement-structure design with the MEPDG should be performed using Dynamic Modulus and PG Binder properties imported from the Y:\ network drive or the Department's website.

1. Structure.

   a. Surface Shortwave Absorptivity. Use the MEPDG default value of 0.85.

   b. Layers. The MEPDG layer inputs should be based on the INDOT *Standard Specifications* and Figures 52-13D and 52-13E. A maximum of 6 input layers is supported. The maximum number of input layers that can be asphalt layers is 3. If the trial design includes a drainage layer, the 3 base layers should be input as one base layer. The layer thicknesses should be in accordance with Figure 52-13A or 52-13B.

      (1) Type, Material, and Thickness. These are determined based on the INDOT *Standard Specifications* and Figures 52-13D and 52-13E for the trial design.

      (2) Thin Non-Structural Layers. These should be combined with other layers (e.g. HMA open-graded friction)

      (3) Bedrock. This can be ignored where the depth to it is greater than 6 m.

      (4) Filter Fabrics. For drainage purposes in the pavement structure, these should be ignored in the MEPDG design.

2. Material Properties. The Office of Pavement Engineering will maintain input files associated with material properties. The input files will be available at Y:\Div.Program Development\Pavement Engineering\MEPDG file, or on the Department's website. The user of the MEPDG software will be able to import the following:

a. dynamic modulus;

b. SUPERPAVE Asphalt Binder Test data; and

c. asphalt general inputs. For 25.0 mm, 19.0 mm, 12.5 mm, 9.5 mm NMAS, or SMA 9.5 mm NMAS, values are provided in Figure 52-8D; and

d. Creep Compliance data file.

3. Thermal Cracking. The MEPDG calculates average tensile strength, creep compliance, mixture VMA, and mix coefficient of thermal contraction, internally. For aggregate coefficient of thermal contraction, use the value for limestone, 6.05 e^{-6}.

52-8.03(03) Rigid-Pavement-Layer Design

A rigid-pavement system consists of portland cement concrete pavement on granular subbase on prepared subgrade. A final pavement-structure design in the MEPDG should include all the layers described in the Figure 52-13 series typical pavement sections. Iterative runs in the MEPDG should be conducted to minimize the structural thicknesses while satisfying the pavement performance prediction for the design life. A new rigid-pavement trial should be started by first creating a template identifying all subgrade and pavement layers.

1. Design Features. The design feature inputs in the MEPDG should be based on the INDOT *Standard Specifications* and *Standard Drawings*.

a. Joint Spacing. This is the parameter in the design that determines the pavement performance predictions as a requirement for the design. The recommended initial trial value for joint spacing is 4.5 m for pavement thickness less than 250 mm, 5.5 m for pavement thickness of 250 but less than 300 mm, or 5 m for pavement thickness of 300 mm or greater. The most economical design has the longest joint spacing that satisfies the performance criteria.

b. Sealant Type. Use the most predominant transverse sealant type, which is silicone sealant.

c. Random Joint Spacing. This technique is no longer used.

d. Doweled Transverse Joint. This option should always be selected.

e. Dowel Diameter and Dowel-Bar Spacing, and Tied PCC Shoulder. These should be as shown on the INDOT *Standard Drawings*.

f. Tied PCC Shoulder. This is a project-specific input.

g. Long Term LTE (Load Transfer Efficiency). This should be 50% to 70% for a sawed longitudinal joint with tie bar, 30% to 50% for a longitudinal construction joint with tie bar, or 0% for no tie bar. Use 60% as the default value.

h. Widened Slab. This option should be checked if the pavement slab is wider than 3.6 m. The slab width should be input. A slab width of less than 3.6 m can be analyzed using a 3.6-m slab width, but by decreasing the mean offset distance from the slab edge to outside of tire.

i. PCC-Base Interface. Unless specified otherwise, the interface is full-friction contact.

j. Erodibility Index. The value for a drainable base is Very Erosion Resistant (2). The value for cement- or asphalt-stabilized base is Extremely Resistant (1).

k. Loss of Full Friction. Use 600 as default value (50-year life cycle times 12 months per year).

2. Layers. The only input in this section is the Surface Short-Wave Absorptivity, which is the concrete surface absorptivity value from sunlight. The default value is 0.85.

3. PCC Thermal Properties. This section requires input for thermal properties of concrete. The inputs should be typical values from samples in the field.

a. Layer Thickness. This is the thickness of the concrete layer for trial design. The pavement designer should select a trial design thickness based on experience from past projects. The selected trial design thickness should be in 13-mm increments.

b. Unit Weight. This is the dry unit weight of concrete based on AASHTO T 121. A value of 2280 kg/m^3 is recommended.

c. Poisson Ratio. This is based on samples tested using AASHTO C 469. A value of 0.20 is recommended.

d. Coefficient of Thermal Expansion. This is the coefficient based on samples tested using AASHTO TP 60. A value of 9.7 x 10^{-6} per ^{o}C is recommended for

limestone. A value of 2.0 x 10^{-5} per ^{o}C is recommended for gravel. As a default value, use the value for limestone.

e. Thermal Conductivity. This is for concrete samples tested using ASTM E 1952. A value of 2.16 W/m-K is recommended.

f. Heat Capacity. This is for concrete samples tested using ASTM D 2766. A value of 0.53 kJ/kg-K is recommended.

4. PCC Mix Properties. This section requires input for mix properties of concrete based on the ingredients of the concrete. The inputs are the typical values from a previous concrete-pavement project.

a. Cement Type. Select the appropriate cement type that is expected to be used in the project. A recommended selection is Type I cement.

b. Cementitious Material Content. This value is from a typical mix design from a previous concrete-pavement project in accordance with the INDOT *Standard Specifications*. A recommended value is 300 kg/m^3 including supplemental cementitious materials such as fly ash.

c. Water/Cement Ratio. This value is from a typical mix design from a previous concrete-pavement project in accordance with the INDOT *Standard Specifications*. A recommended value is 0.42 including supplemental cementitious materials such as fly ash.

d. Aggregate Type. Select the type of aggregate to be potentially used in the project limits. Limestone is the most common type of aggregate.

e. PCC Zero-Stress Temperature. This value depends on the Mean Monthly Temperature and Cement content to determine the temperature of PCC zero stress during concrete hardening. The MEPDG provides a calculator option to calculate the default temperature.

f. Ultimate Shrinkage at 40% Relative Humidity. This value represents the ultimate shrinkage of a concrete sample in 40% relative humidity. The default value is 483 microstrain.

g. Reversible Shrinkage. This value represents the reversible shrinkage of a concrete sample as a percentage of the ultimate shrinkage. The default value is 50%.

h. Time to Develop 50% of Ultimate Shrinkage. This value represents the time to develop 50% of the ultimate shrinkage. The default value is 35 days.

i. Curing method: This option depends on the curing method during construction of the concrete pavement. The default option is Curing Compound.

5. PCC Strength Properties. This section requires input based on the hierarchical inputs from the lowest of Level 3 to the highest Level 1. The strength input for Level 3 is flexural strength. For 28-day flexural strength, the default value is 4800 kPa. The MEPDG software calculates the elastic modulus.

52-8.03(04) Unbound Granular Pavement Layer Design

1. Unbound Material – Drainage Layer. The purpose of this pavement layer is to move water from underneath the pavement surface and also to provide a platform to construct the subsequent PCCP.

a. Unbound Material. This input is related to the type of granular material to be used in the drainage layer. The default option is crushed stone, although other materials also can be utilized based on geographical area and availability. For asphalt-stabilized drainage layer, see Section 52-8.03(02).

b. Thickness. This is the thickness of the drainable granular layer only. The default value is 75 mm.

c. Input level: This option requires input based on the hierarchical inputs from the lowest of Level 3 to the highest Level 1. The default value is Level 3.

d. Poisson ratio: This is for a representative sample of crushed stone. The default value is 0.35.

e. Coefficient of Lateral Pressure, K_o. This is for a representative sample of crushed stone. The default value is 0.5.

f. Analysis Type – User Input Modulus. This is an option to select a representative sample value for the resilient modulus in this unbound layer. Select this option and input the value shown.

g. Material Property – Modulus. This is the average resilient modulus for the expected in-place granular material based on representative samples. The default value for Level 3 is 173 000 kPa.

2. Unbound Material – Separation Layer. The purpose of this pavement layer is to provide a separation layer between the drainage layer and the subgrade soil to eliminate migration of fine particles from the subgrade soil if the subbase includes a drainage layer (coarse aggregate, size No. 8), or to seal off the subgrade from moisture if using a dense-graded subbase.

   a. Unbound Material. This input is related to the type of granular material to be used in the separation layer. The default option is crushed stone.

   b. Thickness. This is the thickness of the separation layer only. The typical thickness is 150 mm.

   c. Input Level. This option requires input based on the hierarchical inputs from the lowest of Level 3 to the highest Level 1. The default value is Level 3.

   d. Poisson Ratio. This is for a representative sample of crushed stone. The default value is 0.35.

   e. Coefficient of Lateral Pressure, K_o. This is for a representative sample of crushed stone. The default value is 0.5.

   f. Analysis Type – User Input Modulus. This is an option to select a representative sample value for the resilient modulus in this unbound layer. Select this option and input the value shown.

   g. Material Property – Modulus or CBR. This is the average resilient modulus for the expected in-place granular material based on representative samples. The default value for Level 3 is 207 000 kPa.

3. Unbound Material – Compacted Subgrade Layer and Natural Subgrade Layer. These pavement layers are the bottom layers in the MEPDG pavement design. The function of these layers is to provide a foundation for the subsequent pavement layers. The natural subgrade layer is the untreated insitu material beneath the fill and subgrade treatment.

   a. Unbound Material. This option is related to the type of expected soil in the project limits. The type of soil can be obtained from the geotechnical investigation. The default type is based on AASHTO classification.

b. Thickness. For compacted subgrade the default value is 600 mm. For natural subgrade, check the Last Layer option to identify that this is the last layer with infinite thickness.

c. Input Level. This option requires input based on the hierarchical inputs from the lowest of Level 3 to the highest Level 1. The default value is Level 3.

d. Poisson Ratio. This is for a representative sample of crushed stone. The default value is 0.35.

e. Coefficient of Lateral Pressure, K_o. This is for a representative sample of crushed stone. The default value is 0.5.

f. Analysis Type – User Input Modulus. This is an option to select a representative sample value for the resilient modulus in this unbound layer. Select this option and input the value shown.

g. Material Property – Resilient Modulus. This is the average resilient modulus for the expected in-place subgrade soil based on representative samples. The default values for Level 3 are based on the selection of the AASHTO or USCS soil classification. By selecting the type of soil, the MEPDG will input a default value. For compacted subgrade and natural subgrade layers use Level 2 input, and use the values from the geotechnical report. If the natural subgrade layer value is not shown in the Geotechnical Report, use ½ of the compacted subgrade value.

h. Analysis Type. The select representative value is the design value.

52-8.03(05) Stabilized Pavement Layer Design

1. Subgrade Treatment. The purpose of this pavement layer is to support the subsequent upper pavement structural layers. The strength and properties of the stabilized materials are based on the design strength of the materials. For lightly-stabilized materials, such as lime or fly-ash stabilization, these materials are not classified as stabilized materials in the MEPDG. Rather, such materials are treated as compacted subgrade soil with increased modulus values. The following are the guidelines for inputs in the MEPDG.

a. Unbound Material. This option is related to the type of expected soil in the project limits. The type of soil can be obtained from the soil borings for a particular project. The default type is based on AASHTO classification.

b. Thickness. For compacted subgrade, the default value is 600 mm.

c. Input Level. This option requires input based on the hierarchical inputs from the lowest of Level 3 to the highest Level 1. The default value is Level 3.

d. Poisson Ratio. This is for a representative sample of crushed stone. The default value is 0.35.

e. Coefficient of Lateral Pressure, K_o. This is for a representative sample of crushed stone. The default value is 0.5.

f. Analysis Type – User Input Modulus. This is an option to select a representative sample value for the resilient modulus in this unbound layer. Select this option and input the value shown.

g. Material Property – Modulus. This is the average resilient modulus for the expected in-place subgrade soil based on representative samples. For Level 2 input, use values from the geotechnical report.

h. Analysis Type. The select representative value is the design value.

2. Chemical Modification. This type of stabilization is considered stabilized base in the MEPDG. However, it is not typically used unless it is specifically required by the Geotechnical Report. The purpose of this pavement layer is to support the subsequent upper pavement structural layers. The strength and properties of the stabilized materials are based on the mix design of the materials. For moderately stabilized materials, such as cement or asphalt stabilizations, these materials should be tested for their strength and physical properties. This type of stabilization is considered stabilized base in the MEPDG.

INDOT currently does not specify chemical modification. The following are the guidelines for inputs in the MEPDG for information purposes only.

a. Material Type. This option is related to the type of expected stabilized material to be used in the project.

b. Layer Thickness. This is the thickness of the stabilized material only, as it is based on trial design. A preliminary value of 75 mm is appropriate.

c. Unit Weight. This is the unit weight of the stabilized material. This value is a result of the laboratory testing. The default value is 2400 kg/m^3.

d. Elastic/Resilient Modulus: This is the modulus of elasticity or the resilient modulus of the stabilized material. The default values are as follows: asphalt stabilized, 2,000 MPa; cement stabilized, max. 5%, 2750 MPa; soil cement, max. 10%, 3450 MPa.

e. Thermal Conductivity. This is the thermal conductivity of stabilized material. A value of 2.16 W/m-K is recommended.

f. Heat Capacity. This is the heat capacity of the stabilized material. A value of 0.53 W/kg-K is recommended.

3. Stabilized Drainage Layer. Stabilized drainage layers are not currently specified. The purpose of this pavement layer is to provide a durable pavement drainage layer to remove water from the body of the pavement. The strength and properties of the stabilized materials are based on the mix design of the materials. For fully-stabilized materials such as cement or asphalt stabilizations, these materials should be tested for their strength and physical properties. For asphalt-stabilized drainage layer, the inputs are identical to those for the open-graded layer described in Section 52-8.03(02). For cement-stabilized drainage layer, the following are the guidelines for MEPDG inputs.

a. Material type: This is the cement stabilized type.

b. Layer Thickness. This is the thickness of the cement stabilized drainage layer. The default value is 0.75 mm.

c. Unit Weight. This is the unit weight of the cement stabilized drainage layer. This value is aresult of the laboratory testing. The default value is 2400 kg/m^3.

d. Elastic/Resilient Modulus. This is the modulus of elasticity or the resilient modulus of the cement-stabilized drainage layer. The default value is 10 000 MPa.

e. Thermal Conductivity. This is the thermal conductivity of stabilized material. A value of 2.16 W/m-K is recommended.

f. Heat Capacity. This is the heat capacity of the stabilized material. A value of 0.53 W/kg-K is recommended.

52-9.0 PAVEMENT CROSS SECTION DESIGN

The Office of Pavement Engineering's Pavement Design Engineer recommends the pavement type selection for each non-District Discretionary Program project. For a project within the District Discretionary Program, the district's Pavement Design Engineer will be recommending the selection. For a LPA project, the LPA or its designated representative will provide the selection.

A new pavement, pavement replacement, or major rehabilitation project will be identified and recorded by the Pavement Design Engineer. The pavement type for each project will be selected based on specific project considerations which include the project budget, the geotechnical engineering report, the project design traffic, and the square measure of pavement and shoulders that will be constructed. The pavement type will be selected by a panel composed of the Planning Operations Deputy Commissioner, the Business and Asset Management Deputy Commissioner, the Production Management Division Director, and the Pavement Engineering Manger. The Pavement Design Engineer prepares designs and life-cycle costs for each project and provides them at a quarterly Pavement Type Selection meeting. The Asphalt Pavement Association of Indiana (APAI) executive director, the American Concrete Pavement Association, Indiana Chapter (IN-ACPA) executive director, and the FHWA pavement and materials engineer are invited to this meeting as non-voting participants. Copies of the pavement designs selected by the panel are distributed to the Pavement Steering Committee at the next Pavement Steering Committee meeting.

The factors to be considered in selecting pavement types include, but are not limited to, the preliminary pavement design, life-cycle cost analysis, and adjoining pavement types. For a rehabilitation or partial 3R project, the factor to consider is the condition of the existing pavement.

A new pavement structure is designed for a project where a new roadway or a replacement pavement structure will be constructed or where the existing pavement is being removed and replaced. Pavements should be designed in accordance with the AASHTO MEPDG and should be detailed as shown in the Figures 52-13 series, Typical Pavement Sections. An approved geotechnical report and traffic data report will be completed and submitted by the project designer for each new or replacement pavement structure.

A rehabilitation design is the most varied and complicated of all pavement designs. A structural or functional HMA overlay, or PCCP over existing pavement, is used where the existing

pavement is not structurally sufficient. Rehabilitation of an asphalt pavement involves the placement of an overlay. Rehabilitation of PCCP can involve a HMA overlay, a PCCP over existing PCCP, or a HMA overlay over PCCP with slab reduction. Rehabilitation of a composite pavement should consider the required treatments for both asphalt and portland cement concrete pavements.

52-9.01 Aggregate Pavement

Requirements for Compacted Aggregate Pavement (CAP) are shown in the INDOT *Standard Specifications*. CAP is constructed on a prepared subgrade.

The subgrade should be designed in accordance with the geotechnical report and constructed in accordance with the INDOT *Standard Specifications*. The geotechnical recommendations will identify the Subgrade Treatment to be specified for a project and all special geotechnical design considerations.

The CAP thickness is 250 mm, which is composed of 100 mm of compacted aggregate size, No. 73 on 150 mm of compacted aggregate, size No. 53, Base on the prepared subgrade.

52-9.02 HMA Pavement

Requirements for HMA pavement are shown in the INDOT *Standard Specifications*. HMA is constructed on a prepared subgrade.

The subgrade should be designed in accordance with the geotechnical report and constructed in accordance with the INDOT *Standard Specifications*. The geotechnical report will include recommendations for the subgrade treatment. The designed thickness of HMA or HMA on compacted aggregate base is determined in accordance with the MEPDG and constructed on the prepared subgrade. The minimum HMA or composite HMA and compacted aggregate thickness is 250 mm.

52-9.02(01) Mixture Designation

The Pavement Design Engineer will determine whether to use Quality Control/Quality Assurance (QC/QA) HMA mixtures, or HMA mixtures, both as described in the INDOT *Standard Specifications*. The criteria for using QC/QA-HMA mixtures or HMA mixtures are based on the quantity of material to be used or location of high stress areas.

52-9.02(02) QC/QA-HMA Mixtures

QC/QA-HMA is specified for all projects, except those with limited pavement quantities, or where high traffic-volume conditions require that the mixture be engineered to withstand the traffic-induced stresses. QC/QA-HMA should be specified for the following:

1. a mixture that exceeds one sublot of material and is placed at least 1.2 m width. Shoulders with non-uniform widths that include areas of less than 1.2 m width should not be specified as QC/QA-HMA mixtures because a representative random sample cannot be taken in an area of less than 1.2 m width.. The INDOT *Standard Specifications* defines a sublot as 600 Mg for surface courses or 1000 Mg for base or intermediate courses;

2. an urban rehabilitation project that includes multiple- and closely-spaced intersections throughout its limits;

3. an urban intersection project with mainline or approach ESALs > 3,000,000. Such an intersection incurs high stresses in the pavement caused by heavy, slow moving, or stopped traffic. Mixtures placed off the mainline are not required to be QC/QA. Where small quantities of mixture off the mainline are required, the project designer should evaluate the number of mixtures specified to limit the number of mixture designations required in the contract. Small quantity-mixture designations should be made as in described Section 52-9.02(03);

4. a rural intersection project with mainline or approach ESALs > 3,000,000 that has stop conditions. Such an intersection incurs high stresses in the pavement caused by heavy, slow moving, or stopped traffic, and are not part of an adjoining rehabilitation project. Mixtures placed off the mainline are not required to be QC/QA. Where small quantities of mixture off the mainline are required, the project designer should evaluate the number of mixtures specified to limit the number of mixture designations required in the contract. Small quantity-mixture designations should be made as described in Section 52-9.02(03); or

5. all open-graded mixtures are QC/QA and are either QC/QA-HMA 5, 76, Intermediate, OG19.0 mm; or QC/QA-HMA 5, 76, Intermediate, OG25.0 mm.

The pay items for QC/QA-HMA mixtures specify the ESAL category, the high-temperature performance grade of asphalt binder, the mixture course, and the nominal aggregate size of the mixture. The nominal aggregate size is a name designation and is always specified with a metric designation that agrees with the AASHTO SUPERPAVE designations.

A QC/QA-HMA pay item should use the format as follows:

QC/QA-HMA,	_____,	_____,	_____,	_____ mm
	(ESAL Category)	(PG Binder)	(Course)	(Mixture Designation)

The ESAL categories are listed in Figure 52-9A, ESAL Category for QC/QA-HMA Mixtures.

The high-temperature performance-grade (PG) binder will vary depending on the factors included in Section 52-9.02(04), and will be 64, 70, or 76. However, for an open-graded mixture, the high-temperature performance-grade binder is always 76. The low-temperature performance grade of -22 is always used and is specified in the INDOT *Standard Specifications.*

The course designation is the specific mixture and will be Surface, Intermediate, or Base.

The mixture designation will be the mixture designed. A surface course will be either 4.75, 9.5 or 12.5 mm mixture. An intermediate course will be 9.5, 12.5, 19.0, 25.0, OG 19.0, or OG 25.0 mm mixture. A base course will be 19.0 or 25.0 mm mixture.

EXAMPLE: The pay item QC/QA-HMA, 4, 76, Surface, 9.5 mm represents a QC/QA-HMA-mixture with between 10,000,000 and 30,000,000 ESALs, a PG 76 high-temperature binder, a Surface course, and a mixture designation size of 9.5 mm.

The project designer should use the pay-item descriptions shown in the INDOT *Standard Specifications* for QC/QA-HMA mixtures.

52-9.02(03) HMA Mixtures

HMA is specified for a limited-quantities project or where construction constraints require that the material be placed in non-uniform widths or thicknesses. HMA should be utilized for a project where the mixture does not exceed one sublot of material.

For miscellaneous mixtures such as HMA for wedge and leveling, HMA for approaches, etc., the project designer should specify the applicable pay item and mixtures as listed in the INDOT *Standard Specifications.*

A HMA pay item should use the format as follows:

HMA _____, Type _____

(Course) (Type)

The mixture course designation is the specific mixture and will be Surface, Intermediate, or Base.

The mixture type is determined from ESALs calculated for the project's pavement design. The type categories for HMA mixtures are listed in Figure 52-9B, Mixture Type for HMA Mixtures.

EXAMPLE: The pay item HMA Surface, Type B represents a HMA mixture for the range of 0.3 million ≤ ESAL < 3 million, and Surface course.

The project designer should use the pay item descriptions shown for HMA mixtures in the INDOT *Standard Specifications*.

52-9.02(04) PG Binder and Traffic Groups

Performance Graded (PG) Binders for QC/QA mixtures are designed based on their performance-related properties determined for the project's climate (temperature) and location within the pavement structure. Base mixtures are designed for a lower high-temperature than the surface and intermediate mixtures. The PG binder should be adjusted based on the speed and amount of traffic for the project. For an HMA overlay, the type and condition of the existing pavement should also be considered. The computer program LTPPBIND should be used to select the grades of the PG Binder for a specific project. The latest version of LTPPBIND may be downloaded from the web site http://www.fhwa.dot.gov/pavement/ltpp/ltppbind.cfm.

PG binders are identified with high and low Celsius temperature values. For example, PG 70-22 identifies 70°C as the high-temperature design value and -22°C as the low-temperature design value. The high-temperature value is the average seven-day maximum pavement temperature. The low-temperature value is the lowest air temperature recorded at the weather station(s) nearest the project site.

The binder selection reliability is used to indicate the probability that the design high and low temperatures will not be exceeded during the design life. A value of 64, 70, or 76 should be used for the high-temperature design and a value of -22 will be used for the low-temperature design. The value selected for design high temperature should be evaluated for 98% reliability. However, a design high-temperature value satisfying 90% reliability may be considered for a Traffic Group A roadway.

The PG binder for a QC/QA project will be identified in the pay-item designation. The INDOT *Standard Specifications* specify the PG binder for each non-QC/QA mixture.

Where shoulders are constructed full depth or where the shoulders will be used for traffic-maintenance operations, the shoulder load spectra will be the same as those for the mainline. Where shoulders are not constructed full depth and will not be used for traffic-maintenance operations, the traffic load spectra should be Traffic Group A.

52-9.02(05) Asphalt-Pavement Rehabilitation

An asphalt-pavement structure identified as having distresses listed in Section 52-6.02 should be rehabilitated by means of the treatment recommended therein. The pavement designer will specify the type and limits of milling, and the type and thickness of an overlay. The existing pavement plus the proposed rehabilitation will be designed for structural sufficiency by using FWD testing, coring, and the MEPDG.

52-9.02(06) Shoulders

For a HMA paved shoulder of 1.2 m or narrower, the project designer should specify the same HMA pay-item designations and thicknesses as those used for the adjacent travel lane. For a HMA paved shoulder wider than 1.2 m, the project designer should specify the thicknesses and HMA pay-item designations for the appropriate ESAL level identified in the Figures 52-13 series.

For a HMA paved shoulder of 1.2 m or narrower consisting of 360 kg/m^2 over 150 mm of compacted aggregate, the project designer should specify the same HMA pay-item designation for the surface course as that of the travelway's HMA Surface course.

Shoulder corrugations should be in accordance with Section 45-1.02(06).

52-9.02(07) [Section Deleted]

52-9.02(08) HMA for Approaches

HMA for Approaches is a mixture designated for a drive, public-road approach, crossover, turn lane, acceleration or deceleration lane, mailbox approach on a non-paved shoulder, etc. It should be used for a short project where the HMA quantity is less than 200 Mg, i.e., bridge replacement or overlay, small structure replacement, etc., where the paving involves a large amount of handwork or non-paving movement of the paver and rollers.

For a drive, public-road approach, or crossover, the limits and HMA section for HMA for Approaches, for each type, are shown on the INDOT *Standard Drawings*. Where the AADT exceeds the amount shown on the INDOT *Standard Drawings*, the HMA section must be determined in accordance with Section 52-8.0.

For a public-road approach, the limits for HMA mixtures for approaches may be extended to include up to an additional 30 m of pavement to satisfy project requirements. If the project requires more than 30 m of additional pavement, the public-road approach will be designed as HMA for Approaches, of the type required. The additional pavement will be designed in accordance with Section 52-8.0.

For a HMA turn lane, HMA acceleration or deceleration lane, HMA wedges for a bridge deck overlay project, HMA approaches for a bridge-replacement project that requires less than 200 Mg of HMA material, or HMA pavement less than 60 m in length on a small-structure-replacement project, the pavement will be designed in accordance with Section 52-8.0 as HMA for Approaches, of the type required.

For a mailbox approach on a non-stabilized shoulder, HMA for Approaches, of the type required, should be used as specified on the INDOT *Standard Drawings*.

52-9.02(09) Widening with HMA

An existing pavement may be widened to 1.5 m or less on each side if widening with HMA. However, the minimum width of widening with HMA specified is 0.6 m for constructability purposes. This minimum width of widening may result in extra lane width or may require removal of existing pavement to satisfy the 0.6-m minimum-width requirement. The longitudinal joint of the widened pavement should not be located in the wheel path of the driving lane. The pay-item designation for this work will be Widening with HMA, of the type required, regardless of the quantity involved.

If specific project widening requirements exceed 1.5 m, the widened pavement area will not be specified as HMA widening, but will be identified as HMA pavement. The pay items specified will be either QC/QA-HMA or HMA in accordance with Section 52-9.0, and the excavation and subgrade treatment will be as described in the INDOT *Standard Specifications*.

52-9.02(10) Seal Coat

Seal coat, or chip seal, is used to seal a shoulder, to seal a very low-traffic-volume roadway, or during construction to bond loose material to allow construction traffic to use the surface. The requirements for seal coat are shown in the INDOT *Standard Specifications*.

52-9.02(11) Prime Coat

Prime coat is required for a rubblized base that is to be overlaid. The prime coat binds the top portion of the rubblized base with the first HMA layer so that the HMA material will not slide relative to the base material during compaction of the HMA. Prime coat should not be specified to be placed on a compacted-aggregate base to be overlaid with HMA material. The requirements for prime coat are shown in the INDOT *Standard Specifications*.

52-9.02(12) Tack Coat

Tack coat is required beneath each course of HMA material that is placed on an existing pavement or newly-constructed HMA course. The tack coat binds the new HMA material to the material already in place. HMA or PCCP is to be tacked prior to placement of a HMA mixture. The requirements for tack coat are shown in the INDOT *Standard Specifications.*

52-9.03 PCCP Pavement

The requirements for PCCP are shown in the INDOT *Standard Specifications*. PCCP is constructed on subbase for PCCP (drainable subbase), or dense-graded subbase, on a prepared subgrade.

The subgrade should be designed in accordance with the geotechnical report. The geotechnical recommendations may include a soil modification or stabilization process, subgrade-treatment type, or a compacted-aggregate stabilization layer.

Subbase for PCCP is placed on the prepared subgrade and is composed of 75 mm of coarse aggregate, size No. 8, on 150 mm of compacted aggregate, size No. 53. The coarse aggregate, size No. 8 is a permeable layer that collects and removes water entering the pavement subbase system. The compacted aggregate, size No. 53 is a dense layer that separates the subgrade from water entering the pavement subbase system. Underdrains must be included where subbase for PCCP is specified. Dense-graded subbase is used under miscellaneous PCCP such as a drive, reinforced-concrete bridge approach, etc., or may be used where underdrains are not warranted. Dense-graded subbase is composed of 150 mm of compacted aggregate, size No. 53.

The designed thickness of PCCP determined by the MEPDG is placed on the Subbase for PCCP. The minimum PCCP thickness is 175 mm. Transverse joints in the concrete pavement are spaced in accordance with the INDOT S*tandard Drawings* and are constructed as contraction joints type D-1. The D-1 contraction joints shown on the INDOT *Standard Drawings* have variable-size dowel bars dependent on the PCCP thickness. The joint spacing should be modified to meet a drive, inlet, adjacent lane, etc., such that all joints are continuous across the entire width of pavement including shoulders. The additional D-1 joints should be included in the contract quantities.

Non-standard joints are not to be used in a pavement without approval of the Department's Pavement Steering Committee (PSC). If a project designer desires to utilize non-standard pavement joints in an individual contract, a submittal should be made to the PSC through the Office of Pavement Engineering. The pavement designer should contact the Pavement Design Engineer to determine the required submittal contents. The PSC may require the pavement designer to make a presentation to provide additional justification for the use of non-standard joints.

Quality Control/Quality Assurance (QC/QA) PCCP pay items and PCCP pay items, as described in the INDOT *Standard Specifications*, are used for a project specifying PCCP. The criteria for using QC/QA-PCCP or PCCP are based on the area of PCC pavement specified. For a project PCCP quantity of 6000 m^2 or greater, the pay item should be QC/QA-PCCP, ___ mm. For a project PCCP quantity of less than 6000 m^2, the pay item should be PCCP, ___ mm.

52-9.03(01) PCCP Rehabilitation

A PCCP rehabilitation consists of Concrete Pavement Restoration (CPR), preventative maintenance, functional treatment, structural treatment, or undersealing. CPR is used where the existing PCCP is structurally sufficient.

1. Concrete-Pavement Restoration. CPR of a PCCP may be used as recommended in Section 52-7.03 where the existing PCCP is considered to be structurally sufficient but has reduced serviceability. CPR alternatives are full or partial depth patching, PCCP profiling, joint resealing, retrofit load transfer, shoulder restoration, slab stabilization (undersealing), longitudinal crack and joint repair, overlay, or combinations of these alternatives.

   The condition of the driving lane of PCCP is an indicator of the project's suitability for CPR. FWD testing and core investigation for "D" cracking at joints should be completed. A PCCP where cores indicate a "D" cracking distress is not a candidate for CPR, functional, or PM treatment.

The limitation of patching for distresses other than "D" cracking for each pavement treatment is based on the full-depth patching area required. The limits of the full-depth patching for each treatment are listed in Figure 52-9C, PCCP Patching Limits.

2. Preventative Maintenance. A preventative-maintenance treatment is specified for rehabilitation of a pavement with distresses listed in Section 52-6.03. A preventative-maintenance treatment may consist of HMA over concrete, PCCP profiling, PCCP patching, or joint repair.

3. Functional Treatment. A functional treatment is specified for rehabilitation of a pavement with distresses listed in Section 52-6.03. A functional treatment may consist of HMA over concrete, PCCP profiling, PCCP patching, or joint repair.

4. Structural Treatment. A structural treatment is specified for rehabilitation of pavement with distresses listed in Section 52-6.03. A structural treatment may consist of HMA over concrete or PCCP over concrete in accordance with Section 52-9.04. The pavement designer will specify the limits of milling, if required, and the HMA overlay or PCCP thickness. The structural sufficiency of the existing PCCP should be determined by means of FWD testing.

5. Undersealing. Undersealing consists of a localized activity where a fluid material is pumped under the concrete slab to add support and to fill voids under the pavement. PCCP or asphalt over PCC composite pavement should be tested with a FWD as described in Section 52-7.04 to determine size and limits of voids underlying the pavement. PCCP on open graded subbase should not be undersealed.

FWD testing must be requested 4 to 6 months in advance of the Ready For Contract date, depending on the time of year. FWD testing cannot be performed during the winter months. The district should coordinate traffic-control activities for the FWD testing.

The cost of the recommended rehabilitation should be compared to the cost of replacing the existing pavement or an alternate rehabilitation technique using life-cycle cost analysis.

52-9.03(02) Curbs and Shoulders

PCCP is constructed with either integral concrete curbs, a widened outside lane with HMA shoulder, or tied full-depth concrete shoulders. The integral curbs, widened outside lane, or tied shoulders stiffen the outside edge of pavement to reduce deflections. D-1 joints are required across the entire PCCP. Compacted aggregate or geotextile should be specified alongside PCCP

curbs or shoulders to prevent erodible material from infiltrating the underdrain system. The typical sections for PCCP shoulders are included in the Figures 52-13 series.

52-9.03(03) Reinforced-Concrete Bridge Approach (RCBA)

The requirements for a RCBA are shown the INDOT *Standard Specifications*. RCBA is constructed on dense-graded subbase on prepared subgrade.

A RCBA is used at a bridge to transition from PCC or HMA pavement to the bridge deck or mudwall. For PCCP, the RCBA spans from the sleeper slab to the pavement ledge on the mudwall. For HMA pavement, the RCBA spans from the end of the HMA pavement to the pavement ledge on the mudwall. The RCBA is reinforced to account for unsupported conditions due to settlement at the end bent or abutment. The RCBA and reinforcing-steel details are shown on the INDOT *Standard Drawings.*

52-9.04 Composite Pavement

The design elements of composite pavements will be determined based on the work type determined from Section 52-7.0.

52-9.04(01) New Construction

HMA over aggregate composite pavement will be designed as flexible pavement in accordance with Section 52-8.0. See Figure 52-13E for specific details.

The project designer should use the appropriate mixture designations shown for QC/QA-HMA or HMA mixtures in accordance with Section 52-9.02. The compacted aggregate should be as designed within the limits shown in the Figures 52-13 series.

52-9.04(02) Rehabilitation

HMA over asphalt and PCC composite pavement will be designed to match the existing pavement. If widening of the pavement is needed and the existing subbase is open graded, the widened PCC base will utilize subbase for PCCP. If the existing subbase is dense graded, the widened PCC base will utilize dense-graded subbase. The minimum width of PCC base widening is limited to pavement widening of less than or equal to 1.5 m. An existing pavement may be widened up to 1.5 m on both sides with PCC base. The pay-item designation of this work will be Widening with PCC Base, ___ mm, in accordance with the INDOT *Standard*

Specifications. For constructability purposes, widening should be a minimum of 0.6 m. The longitudinal joint of the widened PCC base should not be placed in a wheel path of a travel lane.

If the existing pavement has open-graded subbase with underdrains, the existing longitudinal underdrain system will be perpetuated with additional outlets added in accordance with Section 52-10.0. If the existing pavement has dense-graded subbase, underdrains will not be added.

The existing asphalt over PCC composite pavement should be milled in accordance with Section 52-7.05, and prepared in accordance with the INDOT *Standard Specifications*.

52-10.0 UNDERDRAINS

An underdrain is a perforated pipe and coarse aggregate installed longitudinally in the vicinity of a pavement edge. The purpose of an underdrain is to remove water from the subgrade and the pavement structure.

52-10.01 Definitions

Aggregate for Underdrains. Coarse aggregate, size No. 8 or coarse aggregate, size No. 9 used to backfill an underdrain pipe trench.

Dual-Access Underdrain. A run of underdrain that features outlet pipes connected to both ends of the underdrain pipe. The dual-access outlet pipes are installed to provide access to the underdrain pipe for inspection and maintenance purposes.

Geotextiles for Underdrain. An engineered geotextile fabric used to prevent soil particles from contaminating an underdrain pipe and aggregate for underdrains.

HMA for Underdrains. An open-graded HMA used to patch an existing asphalt shoulder over a retrofitted underdrain pipe or an outlet pipe.

Intercept Elevation. The invert elevation at the connection between an underdrain pipe and a PVC connection at a drainage structure or outlet pipe.

Intercept Station. The station at which the connection between an underdrain pipe and a PVC connection at a drainage structure or outlet pipe occurs.

Obstacle. A project feature, such as a paving exception, bridge, culvert, etc., that prevents the continuous installation of underdrain pipe.

Outlet Elevation. The invert elevation of an outlet pipe or PVC pipe connection where the collected water leaves the outlet pipe.

Outlet Pipe. A non-perforated pipe that conveys water collected by the underdrain pipe to a side ditch, median ditch, or drainage structure. An outlet pipe may also be installed at the high end of an underdrain pipe to create a dual-access underdrain.

Outlet Protector. A concrete slab constructed on a sideslope to protect the outlet-pipe end.

Outlet Station. The station where an outlet pipe discharges to the sideslope or is connected to a drainage structure.

Retrofit Underdrain. An underdrain pipe installed along an existing pavement edge in conjunction with a pavement rehabilitation operation, such as rubblization, cracking and seating, or overlaying.

Single-Access Underdrain. A run of underdrain that features an outlet pipe connected to the low end of the underdrain pipe only.

Special Underdrain. An underdrain pipe installed at a specified slope that is not parallel to the pavement profile or a constant depth that differs from that shown in the Figures 52-13 series.

Tangent Grade. The specified grade between two adjacent points of vertical inflection (PVIs) on the vertical alignment of the proposed pavement.

Underdrain Pipe. A perforated pipe installed at the bottom of a longitudinal underdrain trench.

Underdrain Run. An individual segment of underdrain pipe and its associated outlet pipe or pipes.

Underdrain System. The system that collects water from the subgrade and pavement structure and conveys it to the drainage system. Underdrain-system elements include the underdrain trench, underdrain pipe, aggregate for underdrains, geotextiles for underdrain, outlet pipe, outlet protector etc.

Video Inspection. The process of inspecting an individual underdrain run after installation using a video camera.

52-10.02 Existing Underdrain Perpetuation

A roadway with existing underdrains should have all outlet pipes perpetuated as part of the work. The project designer should determine if existing underdrains are present, and locate all existing outlet pipes to evaluate them for needed maintenance or repair. Required repair or maintenance, such as unearthing and replacing an outlet pipe or reconstructing an outlet protector, should be included in the proposed work.

52-10.03 Underdrain Warrants

Underdrains are required for each project, including a LPA project, that satisfies either of the conditions as follows:

1. new pavement or reconstructed pavement with a design-year Average Annual Daily Truck Traffic (AADTT) volume of 100 per day or greater, and a length of at least 1.5 km; or

2. the pavement sections adjacent to the project area have existing underdrains.

Underdrains are also required where using subbase for PCCP, HMA class OG mixtures (QC/QA-HMA 5, 76, Intermediate, OG 19.0 mm; or QC/QA-HMA 5, 76, Intermediate, OG 25.0 mm), or where an existing PCCP is to be cracked and seated or rubblized.

Underdrains are not utilized on a preventative-maintenance or functional treatment project, as defined in Sections 52-7.04(01) and 52-7.04(02), respectively.

Underdrain exceptions should be processed in accordance with Section 40-8.02(02) as a Level 2 Exception.

52-10.04 Design Criteria

52-10.04(01) Slope

1. Underdrain Pipe. Where the tangent grade is 0.2% or steeper, the underdrain pipe will be installed at a fixed depth below the pavement. Where the tangent grade is flatter than 0.2% or if the geotechnical report indicates that the underdrain pipe should be installed at a depth other than that shown in the Figures 52-13 series, special underdrains are required. The special underdrain slope should be 0.2% or steeper.

2. Outlet Pipe. The flattest outlet pipe slope permitted is 0.3%.

52-10.04(02) Size

1. Underdrain Pipe. Construction of new pavement requires underdrain pipe of 150 mm diameter. Rehabilitation of existing pavement requires underdrain pipe of 100 mm diameter.

2. Outlet Pipe. Outlet pipe of 150 mm diameter is required. If underdrain pipe of 100 mm diameter must be used, outlet pipe fittings will be utilized to increase the outlet pipe size to 150 mm.

52-10.04(03) Outlet Spacing

An outlet pipe is required at the low point of a sag vertical curve. It is also required at other low points encountered along the vertical alignment, such as the project beginning or ending point, or at an obstacle location.

Additional outlet pipes are likely to be required throughout the project limits. The maximum underdrain-pipe length should not exceed 180 m. If the proposed underdrain-pipe length is greater than 120 m, a dual-access underdrain is required. If the outlet spacing results in an underdrain-pipe length that is 120 m or less, a single-access underdrain may be utilized.

52-10.04(04) Location

An underdrain, where warranted in accordance with Section 52-10.03, should be constructed along each pavement edge. The underdrain should be continuous through each intersection, ramp, turn lane, taper, etc., and should be located in the pavement section as shown in the Figures 52-13 series. For an approach where an underdrain is warranted in accordance with Section 52-10.03, the underdrain should extend from the mainline underdrain to the limit of the new approach pavement.

1. Underdrain Pipe. The underdrain-pipe location within each proposed cross section should be as shown in the Figures 52-13 series.

   If an inlet, catch basin, manhole, or similar structure is located along the alignment of an underdrain pipe, the underdrain pipe may be connected directly to the drainage structure. The connection should be at least 150 mm above the structure invert elevation.

A direct connection of an underdrain pipe to a pipe culvert or a precast-concrete culvert should be avoided.

2. Outlet Pipe. The connection between an outlet pipe and an underdrain pipe should be as shown on the INDOT *Standard Drawings*. Ninety-degree elbows or tees should not be utilized in these connections.

   One of the 45-degree elbows may be omitted if necessary to provide a satisfactory outlet.

Separate outlet pipes should be provided for each underdrain pipe. Outlet pipes for adjacent underdrain pipes at a sag-vertical-curve low point or for adjacent dual-access underdrains should be installed in a common trench as shown on the INDOT *Standard Drawings*. Outlet pipes installed in a common trench should outlet at the same elevation.

The outlet elevation should be at least 0.6 m above the flowline elevation of a side ditch, 0.3 m above the flowline elevation of a median ditch, or 0.15 m above the invert elevation of an inlet, catch basin, manhole, or similar structure.

If an underdrain pipe has no suitable outlet available at an adjacent ditch line or drainage structure, the outlet pipe may be installed under the pavement to an acceptable outlet on the opposite side of the roadway. The outlet-pipe installation should be designed so as not to conflict with the underdrain-pipe installation along the opposite pavement edge.

52-10.04(05) Backfill

1. Underdrain Pipe. Aggregate for underdrains is used to backfill an underdrain pipe trench. A retrofit underdrain requires HMA for underdrains for patching an existing asphalt shoulder above the underdrain-pipe trench as shown on the INDOT *Standard Drawings*.

2. Outlet Pipe. Outlet-pipe backfill includes structure backfill and suitable material placed as shown on the INDOT *Standard Drawings.* HMA for underdrains is required for patching an existing asphalt shoulder above the outlet-pipe trench associated with a retrofit underdrain as shown on the INDOT *Standard Drawings*.

52-10.04(06) Outlet Protector

An outlet protector is required at each location where an outlet pipe intersects a median or side slope. An outlet protector may contain two outlet pipes.

The INDOT *Standard Drawings* include details for each available protector type.

Figure 52-10A, Outlet Protector Slope Limits, includes acceptable slopes for construction of each outlet-protector type.

The outlet protector selected should be the largest protector appropriate for the proposed slope that can be constructed considering all conflicts to the outlet location.

52-10.04(07) Geotextiles for Underdrain

There are two applications where geotextiles are used in conjunction with underdrain-pipe installation. The first application is as an underdrain-pipe trench liner. Trench lining should be used only if the geotechnical report recommends such an installation or if it can be verified by other means that silt or loam soils exist within the project limits. The second application for geotextile is to prevent the contamination of the underdrain-pipe backfill during the construction of embankment behind a concrete curb. Installation of the geotextile should be as shown in the Figures 52-13 series, and is required in conjunction with curb construction above an underdrain pipe.

52-10.04(08) Video Inspection

Video inspection of an underdrain system should be included in each project with at least 900 m of underdrain pipe. The contract quantity should be as shown in Figure 52-10B, Video Inspection Contract Quantities.

52-10.05 Contract-Document Preparation

52-10.05(01) Plans

Information related to underdrains should be shown on the plans asfollows:

1. Typical Cross Sections Sheet.

    a. The underdrain pipe location as illustrated in the Figures 52-13 series.

    b. Underdrain-pipe trench and backfill details.

2. Plan and Profile Sheet. Special-underdrain limits and slopes should be shown on the profile portion of the sheet.

3. Detail Sheets. All project-specific details should be shown on these sheets.

4. Underdrain Table.

   a. Underdrain Pipe.

      (1) Beginning and ending stations
      (2) Flowline elevations at beginning and ending stations
      (3) Pipe size
      (4) Special-underdrain grade, if applicable
      (5) Pipe quantity
      (6) Aggregate for underdrains quantity
      (7) HMA for underdrains quantity, if applicable
      (8) Geotextiles for underdrains quantity, if applicable

   b. Outlet Pipe.

      (1) Outlet station
      (2) Outlet elevation
      (3) Intercept station
      (4) Intercept elevation
      (5) Outlet protector or structure number at outfall
      (6) Outlet ditch or drainage structure invert elevation at outfall
      (7) Pipe quantity
      (8) Structure-backfill quantity
      (9) HMA for underdrains quantity

   c. Outlet Protectors.

      (1) Type
      (2) Location
      (3) Quantity

52-10.05(02) Specifications

Requirements for underdrains are shown in the INDOT *Standard Specifications.*

52-10.05(03) Standard Drawings

Details for underdrains and outlet protectors are shown on the INDOT *Standard Drawings*.

52-10.05(04) Pay Items

The project designer should determine the contract quantities for the appropriate pay items associated with the underdrain construction.

52-11.0 PREVENTATIVE MAINTENANCE

Preventative Maintenance (PM) treatments are part of the overall pavement preservation program. A PM project is intended to arrest light deterioration, retard progressive damage, and reduce the need for routine maintenance. Except for a one-lay HMA overlay over profile milling, a PM treatment typically does not add structural strength to the pavement. The proper time for PM is before the pavement experiences severe distress, structural problems, moisture, or aging-related damage. These activities can be cyclical in nature and may correct minor deficiencies as a secondary benefit. For PM treatment service life, see Figure 52-8A, Pavement Design Life. In considering a PM treatment, the overall program schedule of the pavement section should be considered. To achieve the optimal benefit of the PM treatment, it should not be applied if a rehabilitation is planned within the service life of the PM treatment.

A PM treatment is not used where the purpose of the project is to correct pavement cross slope, horizontal alignment, vertical alignment, superelevation problems, placement of a turn lane or auxiliary lane, improvement of public-road approach or drive, or guardrail adjustment or repair. A PM project may include incidental enhancements or combinations at an isolated location in accordance with Chapter Fifty-six.

Regardless of the pavement type, proper drainage is essential to the performance of the pavement. Drainage inspection and cleaning consists of the inspection of drainage structures, e.g., underdrain outlets, ditches, catch basins, inlets, and the cleaning of these structures to maintain or restore the flow of water. The locations of underdrains should be identified and the outlets periodically cleaned. The INDOT *Maintenance Management Field Operations Handbook* provides for drainage inspection and cleaning details.

The most commonly used PM treatments are described below. See Figure 52-11A for HMA pavement treatments, or Figure 52-11B for PCCP treatments.

52-11.01 HMA PM Treatments

1. Crack Sealing. Crack sealing is the cleaning and sealing of open cracks or joints in asphalt pavement and shoulders to prevent the entry of moisture and debris. Cracks must be clean and dry and may be routed prior to sealing. This technique may be used for sealing cracks on a newer composite pavement where reflective cracks have developed. This PM treatment may be periodic once more cracks develop as the pavement ages.

   a. AADT. Crack sealing may be performed at any traffic volume, provided adequate traffic control is provided.

   b. Pavement Distresses. Crack sealing may be used to correct low to medium severity surface cracks.

   c. Rutting. Crack sealing does not correct rutting.

   d. Roughness. Crack sealing does not affect roughness. Roughness is typically not a consideration for crack sealing.

   e. Friction. Friction is typically not a consideration for crack sealing. However, overband crack sealing may lower the friction number (FN).

   f. Surface Aging. Crack sealing does not correct surface aging deficiencies.

2. Fog Sealing. A fog seal is a method of adding asphalt to an existing pavement surface to improve sealing or waterproofing, prevent further stone loss by holding aggregate in place, retarding the age hardening of the asphalt, or to simply improve the surface appearance. However, inappropriate use can result in a slick pavement and tracking of excess material. The pavement section should show no structural deficiencies prior to fog sealing. Fog sealing is generally recommended for shoulders or chip sealed surfaces.

   a. AADT. Typically less than 5,000. However, fog sealing may be considered on a higher volume road if traffic can be controlled.

   b. Pavement Distresses. Low severity environmental-related surface cracks.

   c. Rutting. Fog sealing does not correct rutting.

   d. Roughness. Fog sealing does not improve roughness.

e. Friction. Fog seal should not be applied to a road with a low FN. Fog seal will reduce FN for a period until the material fully cures.

f. Surface Aging. A fog seal may be used to restore an aged, oxidized, or raveled surface.

3. Seal Coat. Seal coat is the treatment of the pavement surface with liquid asphalt material and coarse aggregate to prevent deterioration of the surface. Seal coat is often called chip sealing. It provides waterproofing, low-severity crack sealing, and improved friction. The pavement section should show no structural deficiencies prior to chip sealing. Isolated areas with structural deficiencies shall be repaired prior to chip sealing. A previously seal-coated surface may be sealed a second time.

For mainline pavement with AADT over 1,000, asphalt for seal coat type P should be specified.

The type of seal coat should be specified as follows:

a. Type 2, 3, 2P or 3P. These are single-course seal coats appropriate for paved mainline or shoulders. The P designation indicates that a polymer modified asphalt is specified.

b. Type 5, 6, 7, 5P, 6P or 7P. These are double-course seal coats appropriate for unpaved mainline or unpaved shoulders. The P designation indicates that a polymer modified asphalt is specified.

Guidelines for selecting a pavement section for seal coat are as follows:

a. AADT. Typically used if less than 5,000. A seal coat may be considered on a higher-volume road if traffic can be controlled (i.e. total road closure, extended lane closures). A seal coat may be specified for the shoulders of any road regardless of AADT.

b. Pavement Distresses. A seal coat will mitigate low to medium severity surface cracking.

c. Rutting. Seal coat does not correct rutting and should not be used where existing ruts are greater than 6 mm.

d. Roughness. A seal coat will not improve the IRI.

e. Friction. A pavement with a low FN may be considered for a chip seal surface treatment. A seal coat will restore surface friction.

f. Surface Aging. A seal coat may be used to stop future deterioration of an asphalt pavement due to age hardening, oxidation or minor raveling.

4. Microsurfacing. Microsurfacing is a thin, polymer-modified asphalt emulsion mixture. Microsurfacing may be used to provide a new wearing course to arrest the oxidation of asphalt pavement, improve friction, or fill ruts. An existing pavement should have no large cracks or excessive surface irregularities such as shoving. Cores should be taken to determine the thickness and investigate if a stripping condition exists. Core data and life-cycle cost data should be reviewed with the Office of Pavement Engineering for specific recommendations.

All pavement markings and raised pavement markers must be removed prior to placement of a microsurface. This should be included in the appropriate pavement-marking-removal pay items.

Temporary removable markings may not adhere well to a microsurface. Therefore, temporary paint should be included as a pay item.

If a pavement cross section has irregularities that will require a leveling course, or ruts greater than 6 mm that will require a rut fill course, a multiple course microsurface should be specified. Otherwise, a single course microsurface may be specified.

a. AADT. Microsurface may be used without regard to traffic volume.

b. Pavement Distresses. A microsurface may be used on a road with low severity surface cracks. Cracks will typically reflect through the microsurface in a short time period. Cracks should be sealed prior to the application of a microsurface. Cracks wider than 6 mm may need to be routed prior to sealing.

c. Rutting. Microsurface may be used to correct rutting.

d. Roughness. The IRI should be 2050 or less. The pavement should not have severe distresses indicative of a pavement nearing the end of its life. Microsurfacing will not significantly improve surface roughness.

e. Friction. A pavement with a low FN should be considered for a microsurface treatment. A microsurface will restore surface friction.

f. Surface Aging. A microsurface may be used to stop future deterioration of an asphalt pavement due to age hardening, oxidation, or minor raveling.

Each microsurfacing project should be reviewed and approved by the Pavement Steering Committee. A life-cycle cost analysis in accordance with Section 52-12.0 should be completed.

5. Ultrathin Bonded Wearing Course. Ultrathin bonded wearing course (UBWC) is a gap-graded, ultrathin hot-mix asphalt mixture applied over a thick polymer-modified asphalt emulsion membrane. The emulsion membrane seals the existing surface and produces high binder content at the interface of the existing roadway surface. The gap-graded mix is placed with the emulsion membrane in one pass. Core data and life cycle cost data should be reviewed with the Office of Pavement Engineering for specific recommendations.

All thermoplastic pavement markings and raised pavement markers are to be removed prior to placement of a UBWC. The removal quantities should be included in the appropriate pavement-marking-removal pay-items quantities.

The pay item for UBWC should specify the gradation size as 4.75 mm, 9.5 mm, or 12.5 mm.

a. AADT. UBWC may be used without regard to traffic volume.

b. Pavement Distresses. A UBWC may be used on a road with low to moderate severity surface cracks. Cracks should be sealed prior to the application of a UBWC. Cracks wider than 6 mm may need to be routed prior to sealing.

c. Rutting. UBWC does not correct rutting and should not be specified where existing ruts are greater than 6 mm.

d. Roughness. The IRI should be 2210 or less. The pavement should not have severe distresses indicative of a pavement nearing the end of its life. UBWC will moderately improve surface roughness.

e. Friction. A pavement with a low FN may be considered for a surface treatment. A UBWC will restore surface friction.

f. Surface Aging. A UBWC may be used to stop future deterioration of an asphalt pavement due to age hardening, oxidation or moderate raveling.

A UBWC project should be reviewed and approved by the Pavement Steering Committee. A life-cycle cost analysis in accordance with Section 52-12.0 should be completed.

6. HMA Inlay. A thin HMA inlay, or milling and filling, consists of milling the existing surface and replacing it with a new asphalt surface to the original surface elevation. For PM, the surface condition may have minor defects but should not have significant potholes, depressed cracks, or major distresses. Criteria to be used in considering a thin HMA inlay are as follows.

   a. AADT. A HMA inlay may be used without regard to traffic volume. Traffic may be allowed on a newly placed HMA as soon as the final roller pass is complete.

   b. Pavement Distresses. A HMA inlay will correct low to moderate severity surface cracks that may be associated with surface corrugations or washboarding.

   c. Rutting. A HMA inlay will correct rutting.

   d. Roughness. The IRI must be 2360 or less. A HMA inlay will significantly improve the surface roughness. The designer should evaluate the condition of the existing pavement and adjust the design life accordingly.

   e. Friction. A pavement with a low FN may be considered for a HMA inlay surface treatment. A HMA inlay will restore surface friction.

   f. Surface Aging. A HMA inlay may be used to replace an aged, oxidized, or raveled surface.

7. HMA Overlay. A thin HMA overlay consists of profile milling the existing surface and overlaying it with a new asphalt surface. For PM, the surface condition may have minor defects but should not have significant potholes, depressed cracks, or major distresses. Criteria to be used in considering a thin HMA overlay are as follows.

   a. AADT. A HMA overlay may be used without regard to traffic volume.

   b. Pavement Distresses. A HMA overlay will correct low to moderate severity surface cracks that may be associated with surface corrugations or washboarding.

   c. Rutting. A HMA overlay will correct rutting.

d. Roughness. The IRI must be 2360 or less. A HMA overlay will significantly improve the surface roughness. The designer should evaluate the condition of the existing pavement and adjust the design life accordingly.

e. Friction. A pavement with a low FN may be considered for a HMA overlay surface treatment. A HMA overlay will restore surface friction.

f. Surface Aging.A HMA overlay may be used to treat an aged, oxidized, or raveled surface.

52-11.02 PCCP PM Treatments

1. Crack Sealing. Crack sealing consists of the cleaning and sealing of open cracks or joints in PCCP to prevent the entry of moisture and debris. Cracks must be clean and dry and may be routed prior to sealing. This PM treatment may be periodic once more cracks develop as the pavement ages.

2. PCCP Sawing and Sealing Joints. Contraction joints and longitudinal joints should be inspected periodically and cleaned and resealed as required. For PM, timely sealing of the joints prevents dirt and moisture from entering the joints. Rigid pavement, 8 to 10 years old, should be inspected. If, on inspection, 10% of the joints have loose, missing, or depressed sealant, sawing and sealing of the joints should be considered. The joints should be sawed to remove old sealant and to reshape the joint-seal reservoir.

3. Retrofit Load Transfer. This consists of the retrofitting of dowels in jointed PCCP to re-establish load transfer across random cracks. The pavement performance is improved by keeping the elevation of adjacent panels at the same elevation and stops increases in the IRI due to faulting. This work consists of the cutting of slots, placing new dowels or reinforcing bars, then cementing them into place. The pavement may be profiled to improve smoothness after the retrofit load transfer is complete. A Life-Cycle Cost Analysis should be applied to check for the cost-effectiveness of this PM treatment.

4. Surface Profiling. This is a procedure used to restore or improve pavement rideability by removing surface defects that develop based on traffic loading and environmental conditions. Surface profiling enhances surface friction of an existing pavement surface. The resulting corduroy-like surface provides ample channels for water to escape the surface. Surface profiling is recommended to restore rideability if faulting causes the IRI to exceed 150. A faulted pavement must be repaired with retrofit load transfer prior to surface profiling.

5. Partial-Depth Patching. This is primarily used to improve ride quality. It should be limited to the upper one third of the concrete-pavement depth. The area to be patched should be sawed, and all unsound material removed prior to placement of patch material.

6. Full-Depth Patching. This consists of complete removal of a deteriorated section of concrete pavement for a full lane width and patching it with new concrete. Full-depth patching may be used to restore pavement rideability and to replace deteriorated joints and cracks. Full-depth patching details are shown on the INDOT *Standard Drawings.* "D"-cracked joints should not be patched. If a pavement is “D” cracked, a slab-reduction technique and overlay should be used.

7. Underseal. This consists of pumping flowable asphalt or cement material into voids under concrete pavement. This will stabilize the slab, prevent rocking and pumping, and extend the life of the pavement. A pavements with open-graded subbase should not be undersealed. Falling-weight deflectometer (FWD) testing must be done in advance of undersealing to determine locations and material quantities.

8. Slab Jacking. This consists of raising a settled slab to its original profile grade by pumping flowable material underneath. This technique may be used on one or several panels to restore rideability. Panels should be intact with no mid-panel cracking.

52-12.0 LIFE-CYCLE COSTS

52-12.01 General Requirements

This Section provides the methodology to perform a Life-Cycle Cost Analysis (LCCA) for a pavement project. Resources are available for further explanation of LCCA, such as FHWA SA-98-079, *Life-Cycle Cost Analysis in Pavement Designs*. FHWA RealCost, version 2 or higher, software should be used to perform LCCA.

LCCA is an economic evaluation technique that builds on the principles of economic analysis to evaluate the overall long-term solutions for each type of project. LCCA considers initial and future agency, user, and other relevant costs over the life of alternatives discounted to provide comparative costs. This technique allows a project’s cost to be compared over a specified time period. The selection of design alternatives should be made based on a LCCA sensitivity analysis for pavement life costs. A LCCA will be completed on a project which includes more than one feasible alternative as directed by the INDOT Pavement Selection Panel or Pavement Steering Committee.

In the simplest situation, a LCCA evaluates costs associated with two or more particular strategies or design scenarios over an analysis period including the initial construction and at least one succeeding rehabilitation activity. These costs for the alternate scenarios or money flows are discounted to the present time. A comparison of the net present value of the scenarios is made to provide information regarding one of the factors involved in the selection of a pavement design.

The economic evaluation of two feasible design strategies or design scenarios has no relation to the method of financing, or the total cost of the project. Inflation is not a factor in the evaluation since two or more scenarios' cash flows are being compared over the same time period with presumably the same inflation effects. Constant real dollars should be used in the LCCA, then the budget analysis should decide funding sources, inflation rate, and cash-flow requirements.

A LCCA will be required for a new-pavement, pavement-replacement, or major-rehabilitation project with mainline pavement of more than 10,000 yd^2. A LCCA is also required for each treatment identified in Section 52-11.0 to compare preventative-maintenance preservation treatments with differing design lives.

Two scenarios being evaluated with a total net present value within 10% (15 % for a preservation project with an initial cost as calculated for the LCCA of less than $750,000) are considered to be essentially the same. Other factors should be used to make the final selection such as initial costs, constructability, work-zone traffic control, user delay costs, etc.

52-12.02 Definitions

52-12.02(01) Analysis Period

The analysis period is the number of years over which the pavement-life-cycle analysis is conducted. The analysis period should include the initial pavement cost and the cost of at least one subsequent rehabilitation. The analysis period should be at least 50 yr in comparing new pavements. In comparing treatments with lesser design lives the number of years may be less.

52-12.02(02) Discount Rate

The discount rate is used to equate the cash flows to present worth and determine EUAC. For general purposes, a 4% discount rate can be assumed. However, a range of rates from 0% to 10% should be used to determine if the alternate scenarios are discount-rate sensitive. The results of the sensitivity analysis should be shown.

52-12.02(03) Equivalent Uniform Annual Cost (EUAC)

The EUAC is the combining of initial capital costs and all future expenses into equal annual payments over the analysis period.

$$EUAC = (PW)\left[\frac{i(1+i)^n}{(1+i)^n - 1}\right]$$

Where: PW = present worth
i = discount rate
n = number of years from year zero.

52-12.02(04) LCCA Design Life

LCCA design life is the estimated service life of the pavement. The design life shown in Figure 52-8A, Pavement Design Life, should be used for the initial, maintenance, or rehabilitation option.

The design life of the pavement should be varied to test the LCCA for sensitivity based on the existing pavement condition, past performance, or the condition of the drainage system. The design life used for the sensitivity analysis should be documented.

The Office of Pavement Engineering will maintain a listing of historical bid summaries associated with pavement construction, rehabilitation, and maintenance contract costs identified as part of the proposed LCCA. The pavement designer should utilize these costs to compare life-cycle costs of different pavement treatments.

52-12.02(05) Life-Cycle Cost

A factor in identifying and performing economic analyses of alternatives in the design of new pavement construction or the repair and rehabilitation of existing pavement is the life cycle of the alternative under consideration. The life-cycle cost includes the initial capital cost of construction, future maintenance, and future rehabilitation cost estimates. The life-cycle cost may also include user-delay costs during construction and rehabilitation, user vehicle operating and accident expenses, engineering fees, or other expenditures over the life of the pavement. It may also include the residual value, or salvage value of the pavement, at the end of the analysis time period. The pavement designer should use the service lives as shown in Figure 52-12 for the rehabilitation alternatives over the life of the pavement.

The cost of work-zone traffic control and the cost of user delays during construction between designs may have a significant effect on the analysis. These costs should be quantified for the designs.

LCCA costs can include the following.

1. Agency Costs. These include the following:

    a. initial construction costs;

    b. future construction or rehabilitation costs, i.e., overlays, seal coats, reconstruction, etc.;

    c. maintenance costs which recur throughout the design period;

    d. salvage return or residual value at the end of the design period, which may be a negative cost;

    e. engineering and administration costs; and

    f. traffic-control costs if they are involved.

2. User Costs. These include the following:

    a. travel time;

    b. vehicle operation;

    c. accidents;

    d. discomfort; and

    e. time delay and extra vehicle operating costs during resurfacing or major maintenance.

52-12.02(06) Present Worth (PW)

The PW is the value of money at year zero of future expenditures. The future cash flow is discounted by the discount rate to determine PW. The equation for the present worth of a future outlay is as follows:

$$PW = F\left[\frac{1}{(1+i)^n}\right]$$

Where: F = future construction cost
i = discount rate
n = number of years from year zero.

52-12.02(07) Salvage Value (SV)

Salvage value is the residual value of the pavement's remaining service life at the end of the analysis period. As an example, if the pavement surface has 5 yr of remaining life at the end of the analysis, the pavement has a remaining value which has not been used. SV is defined as the construction cost of the last cycle times the ratio of the remaining service years to the last cycle design life. The SV of the pavement is calculated from the equation as follows:

$$SV = (\$)\left(\frac{RL}{DL}\right)$$

Where: \$ = last cycle construction cost
RL = remaining service life, yr
DL = last cycle design life, yr

<u>52-12.03 Analysis Steps</u>

LCCA details should be input into RealCost as follows:

1. <u>Project Level Inputs</u>.

   a. Project Details. Establish project details, such as location and length.

   b. Analysis Options.

      (1) Determine the analysis period.
      (2) Determine the discount rate.

c. Traffic Data.

(1) Enter construction year AADT for both directions.
(2) Enter truck percentages, single unit and combination.
(3) Enter growth rate (%).

d. Value of User Time.

(1) The recommended range for value of time for a passenger car is $10 to $13. The value of time for a passenger car can be modeled as a probabilistic variable of 10%.

(2) The recommended range for value of time for a single-unit truck is $17 to $20. The value of time for a single-unit truck can be modeled as a probabilistic variable of 10%.

(3) The recommended range for value of time for a combination truck is $21 to $24. The value of time for a combination truck can be modeled as a probabilistic variable of 10%.

e. Traffic Hourly Distribution. Use the default value unless actual data is available.

f. Added Vehicle Time and Cost. Use the default value.

2. Alternative-Level Inputs. For Alternative 1 or Alternative 2, enter the following:

a. the alternative description;
b. for each tab, the project-specific information; and
c. for an input with a probabilistic tab, use a standard deviation of 10%.

Once all of the information is entered, run the simulation.

An example of LCCA strategy follows. Differing pavement work types with different design lives may be used in alternate LCCA strategies:

52-12.03(01) HMA Pavement

50-yr analysis period
Design Life as shown on Figure 52-8A
PM Treatment: Crack Seal, at Years 3, 6, 9, 12, 15, and 18

Rehabilitation: Mill and Functional Overlay, at Year 20
PM Treatment: Joint Seal, at Years 23, 26, 29, and 32
PM Treatment: Mill and Overlay, at Year 35
PM Treatment: Crack Seal, at Years 38, 41, 44, and 47
End LCCA, Salvage Value at Year 50 = $0.00

52-12.03(02) PCCP

50-yr analysis period
Design Life as shown on Figure 52-8A
PM Treatment: Joint Seal, at Years 8, 16, and 24
Rehabilitation: HMA Functional Overlay, at Year 30
PM Treatment: Crack Seal, at Years 33, 36, and 39
PM Treatment: Mill and Overlay, at Year 42
PM Treatment: Crack Seal, at Years 45 and 48
End LCCA, Salvage Value at Year 50 = $0.00

For technical assistance, or for an example run of RealCost, contact the Office of Pavement Engineering.

52-13.0 TYPICAL PAVEMENT SECTIONS

52-13.01 HMA Pavement

Typical HMA mainline pavement sections are shown in Figures 52-13A through 52-13E.

52-13.02 PCC Pavement

Typical PCC mainline pavement sections and joint locations are shown in Figures 52-13F through 52-13H. Joint locations are shown in Figure 52-13R.

52-13.03 Miscellaneous Pavement Sections and Details

Overlay sections for an Interstate-route or a divided-roadway pavement are shown in Figures 52-13 I and 52-13J.

Underdrain details are shown in Figures 52-13K through 52-13Q.

Ramp sections are shown in Figures 52-13S through 52-13U.

Concrete-curb sections are shown in Figures 52-13V and 52-13W.

Parking-lot sections are shown in Figure 52-13X.

52-14.0 PAVEMENT-DESIGN REQUEST AND INSTRUCTIONS

A pavement-design request should be submitted on the appropriate forms to the appropriate pavement designer as described in Sections 52-4.02 and 52-8.01. Instructions for completing the forms are shown in Section 52-14.03.

52-14.01 Pavement-Design Request for INDOT Project

A Pavement-Design Request instructional form for an INDOT project is shown as Figure 52-14A. An editable version of this form also appears on the Department's website at www.in.gov/dot/div/contracts/design/dmforms/.

52-14.02 Pavement-Design Request for Local Public Agency Project

A Pavement-Design Request instructional form for a LPA project is shown as Figure 52-14B. An editable version of this form also appears on the Department's website at www.in.gov/dot/div/contracts/design/dmforms/.

52-14.03 Instructions For Completing Pavement-Design Request Form

(1) For INDOT project, I, US, or SR and number. For LPA project, CR and number, or name of road.

(2) For INDOT project, County name or names. For LPA project, name of county, city, or town making request.

(3) Designation number.

(4) Net length of project in an urban or rural area.

(5) Descriptive location of project limits including Reference Posts (RP). The discussion should include the proposed intent of the project as it is related to the pavement and its general classification, e.g. preventative maintenance, functional or structural overlay, reconstruction, widening, added travel lanes, etc. The discussion should indicate if milling or steep grades are included.

(6) Descriptive listing of the history of the pavement, including year of original construction and subsequent overlays. If the project is a resurfacing or rehabilitation-type project, then core depth reports, core pictures, FWD report, and color pictures of existing pavement are to be submitted.

(7) The type of the existing pavement, i.e., aggregate, asphalt, PCCP, or composite pavement, should be identified, with the width and thickness of the existing pavement.

(8) Identify the width, thickness, and condition of the existing shoulders or curbs.

(9) Does the existing pavement have underdrains? If Yes, identify the type and size of the underdrains.

(10) Identification of adjacent pavement types.

(11) The proposed posted speed limit for the project location.

(12) Number of stop conditions, i.e., stop signs, traffic signals, intersections, etc.

(13) List the number and width of the travel lanes and turn lanes to be paved.

(14) Describe the type and width of shoulders or curbs planned.

(15) Provide the appropriate CBR or Resilient Modulus for HMA; Modulus of Subgrade Reaction, *k*, for PCCP; the type of subgrade treatment; and other geotechnical recommendations such as peat areas, other settlement areas, or high water table condition.

(16) The year the project is to be constructed.

(17) Construction-year AADT.

(18) Future year the project is to be designed for.

(19) The design-year projected AADT.

(20) Percent trucks of the AADT that are FHWA Class 4 or higher.

(21) Identify the desired pavement type and the engineering reason for the selection.

(22) For an INDOT project, name of pavement designer or consultant.

(23) If Yes, attached completed document.

(24) Complete proposed pavement and shoulder description, including pay items, and amounts of each layer, for either QC/QA-HMA, HMA, QC/QA-PCCP, or PCCP. Include as applicable, milling type and depth of milling, subgrade-treatment type, widening, subbase for PCCP, underdrains, etc.

(25) Signature of professional engineer submitting the pavement design request.

(26) Seal of professional engineer submitting the pavement design request.

52-6A Dusting
2010

2010
52-6B Block Cracking

52-6C Flushing

52-6D Longitudinal Cracking
2010

2010
52-6E Raveling

2010
52-6F Reflective Cracking

52-6G Rutting
2010

2010
52-6H Shoulder Drop-off

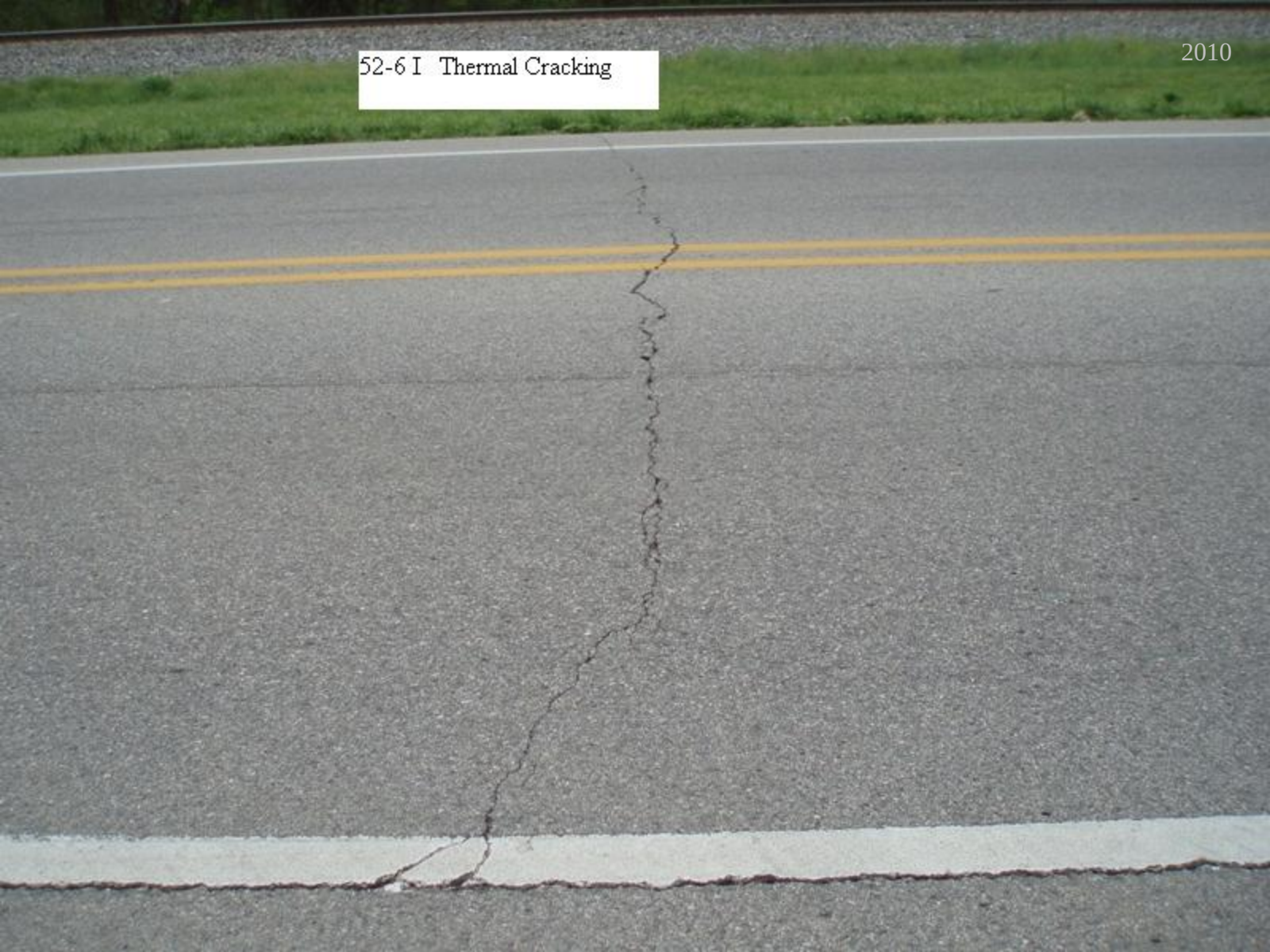
52-6 I Thermal Cracking
2010

52-6 J Alligator or Fatigue Cracking
2010
BARTLETT
DETAILING

52-6K Alkali-Silica Reactivity (ASR)
2010

2010
52-6L Corner Break

2010
52-6M "D" Cracking

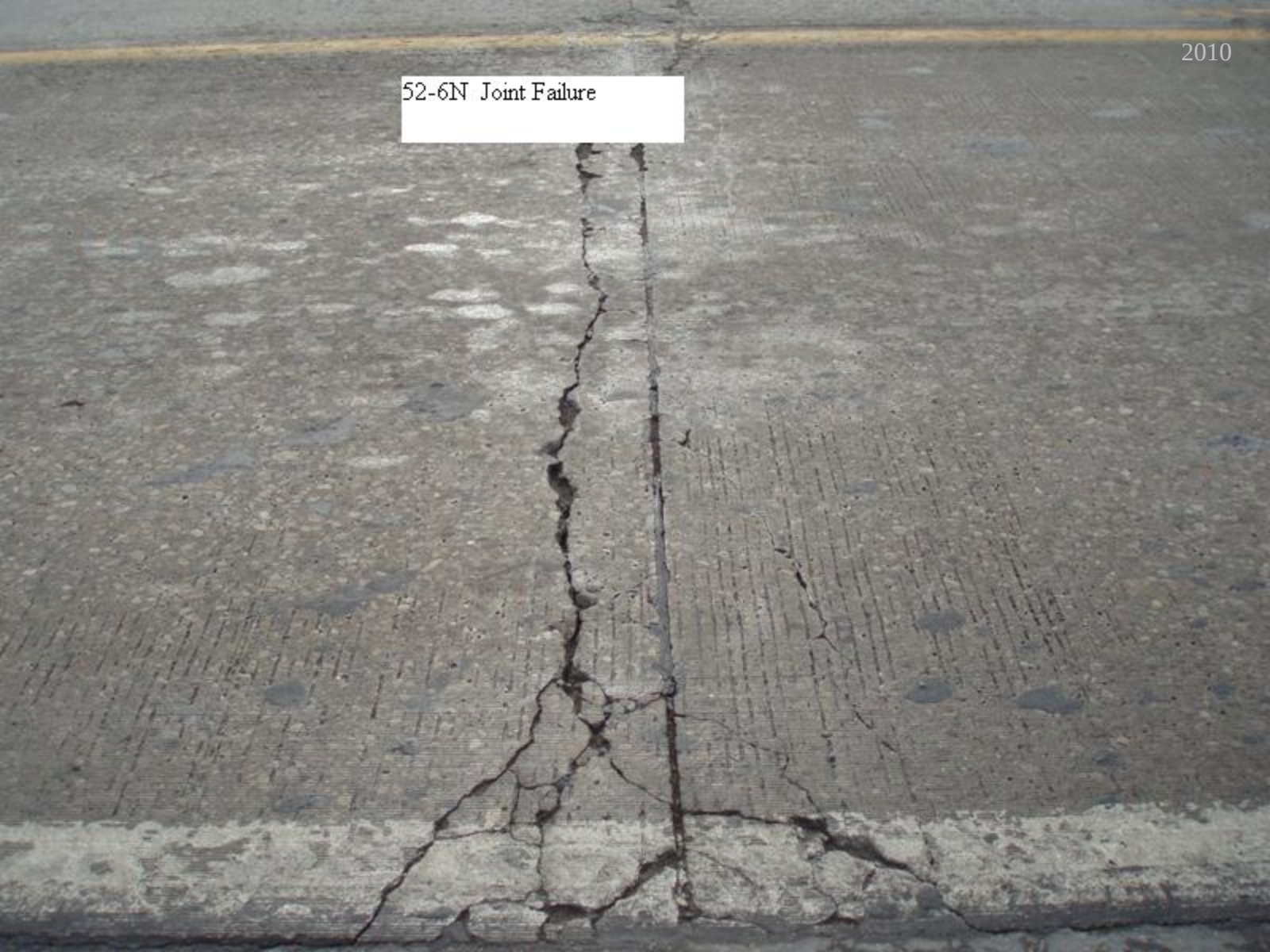
2010
52-6N Joint Failure

52-6 O Longitudinal Cracking
2010

52-6P PCCP Joint-Seal Failure
2010

52-6Q Polishing
2010

2010
52-6R Popout

52-6S Punchout
2010

2010
52-6T Transverse Cracking

2010
52-6U Spalling

AADTT (Trucks/Day)	HMA Thickness	Aggregate Thickness
AADTT < 51	100 mm	200 mm
51 ≤ AADTT < 510	175 mm	125 mm
510 ≤ AADTT < 1700	250 ± 50 mm	--
1700 ≤ AADTT < 5100	300 ± 50 mm	--
AADTT ≥ 5100	350 ± 50 mm	--

PRELIMINARY HMA PAVEMENT THICKNESS

Figure 52-7A

AADTT (Trucks/Day)	Thickness
AADTT < 500	175 to 200 mm
500 ≤ AADTT < 1500	215 to 250 mm
1500 ≤ AADTT < 3000	265 to 300 in.
AADTT ≥ 3000	315 to 375 in.

PRELIMINARY PCCP PAVEMENT THICKNESS

Figure 52-7B

52-7D Falling-Weight-Deflectometer Testing

52-7E Pavement Coring
2010
INDIANA
60037
STATE

Pavement-Work Type	Design Life, Years
PCCP	30
PCCP over Existing Pavement	25
HMA Pavement with SMA	25
HMA with SMA Surface Overlay on Rubblized PCC	25
HMA Pavement	20
HMA Overlay on CRCP	20
HMA Overlay on Rubblized PCC	20
HMA Overlay on Cracked and Seated PCC	15
HMA Overlay over Perpetual Asphalt [1]	
Structural	n/a
Functional	18
Preventative Maintenance	15
HMA Overlay over Built-Up Asphalt [1]	
Structural	18
Functional	15
Preventative Maintenance	9
HMA Overlay over PCCP [1]	
Structural	15
Functional	12
Preventative Maintenance [2]	5
HMA Overlay over JRCP or JPCP [1]	
Structural	15
Functional	12
PCCP Joint Sealing	8
Ultrathin Bonded Wearing Course (UBWC)	8
Microsurface Overlay	8
Concrete Pavement Rehabilitation (CPR) Techniques	6
Chip Seal	4
Asphalt Crack Sealing, Rout and Seal	3
Asphalt Crack Sealing	1

[1] The performance period should be reduced from the value shown if the existing pavement is overly distressed.

[2] The performance period should be increased to 8 yr for existing composite HMA over PCCP.

PAVEMENT DESIGN LIFE

Figure 52-8A

Performance Criteria	Maximum Value at End of Design Life	Reliability
Terminal IRI (mm/km)	Freeway: 2500	90%
	Arterial, Urban: 3000	90%
	Arterial, Rural: 3150	85%
	Collector, Urban: 3000	80%
	Collector, Rural: 3150	75%
	Local: 3150	70%
AC Bottom-Up Cracking, Alligator Cracking (% lane area)	Freeway: 10	90%
	Arterial, Urban: 20	90%
	Arterial, Rural: 25	85%
	Collector, Urban: 30	80%
	Collector, Rural: 35	75%
	Local: 35	70%
Permanent Deformation – AC only Pavement (mm)	Freeway: 10	90%
	Arterial, Urban: 10	90%
	Arterial, Rural: 10	85%
	Collector, Urban: 10	80%
	Collector, Rural: 10	75%
	Local: 10	70%
AC Thermal Fracture (m/km/lane)	Freeway: 9.5	90%
	Arterial, Urban: 13.3	90%
	Arterial, Rural: 11.4	85%
	Collector, Urban: 70	75%
	Collector, Rural: 13.3	80%
	Local: 132.5	70%

PERFORMANCE CRITERIA FOR HMA PAVEMENT OR OVERLAY

Figure 52-8B

Performance Criteria	Maximum Value at End of Design Life	Reliability
Terminal IRI (mm/km)	Freeway: 2530	90%
	Arterial, Urban: 3000	90%
	Arterial, Rural: 3150	85%
	Collector, Urban: 3000	80%
	Collector, Rural: 3150	75%
	Local: 3150	70%
Percent Transverse Slab Cracking	Freeway: 10	90%
	Arterial, Urban: 10	90%
	Arterial, Rural: 10	85%
	Collector, Urban: 10	80%
	Collector, Rural: 10	75%
	Local: 10	70%
Mean Joint Faulting (mm)	Freeway: 4	90%
	Arterial, Urban: 5	90%
	Arterial, Rural: 5	85%
	Collector, Urban: 6	80%
	Collector, Rural: 6	75%
	Local: 6	70%

PERFORMANCE CRITERIA FOR CONCRETE PAVEMENT OR OVERLAY

Figure 52-8C

Asphalt General Input	Value
Reference Temperature, °C or K	21 or 294
Thermal Conductivity, Asphalt, W/m-K	1.09
Heat Capacity, Asphalt, kJ/kg-K	0.59
Poisson Ratio	0.35

Volumetric Properties as Built	NMAS, mm	Value
Effective Binder Content, %	25.0	8.7
	19.0	9.5
	12.5	10.7
	9.5	11.6
	SMA 9.5	13.4
Air voids, %	25.0	8
	19.0	8
	12.5	8
	9.5	8
	SMA 9.5	7
Total Unit Weight, kg/m^3	25.0	2313
	19.0	2303
	12.5	2292
	9.5	2284
	SMA 9.5	2779

MEPDG GENERAL INPUT VALUES FOR ASPHALT PAVEMENT

Figure 52-8D

Design AADTT, trucks per day	Design ESALs, millions	QC/QA-HMA Category*
AADTT < 51	< 0.3	1
51 ≤ AADTT < 510	0.3 ≤ ESAL < 3	2
510 ≤ AADTT < 1700	3 ≤ ESAL < 10	3
1700 ≤ AADTT < 5100	10 ≤ ESAL < 30	4
AADTT ≥ 5100	≥ 30	5

2-LANE ROAD

Design AADTT, trucks per day	Design ESALs, millions	QC/QA-HMA Category*
AADTT < 57	< 0.3	1
57 ≤ AADTT < 570	0.3 ≤ ESAL < 3	2
570 ≤ AADTT < 1900	3 ≤ ESAL < 10	3
1900 ≤ AADTT < 5700	10 ≤ ESAL < 30	4
AADTT ≥ 5700	≥ 30	5

4-LANE ROAD

Design AADTT, trucks per day	Design ESALs, millions	QC/QA-HMA Category*
AADTT < 87	< 0.3	1
87 ≤ AADTT < 870	0.3 ≤ ESAL < 3	2
870 ≤ AADTT < 2900	3 ≤ ESAL < 10	3
2900 ≤ AADTT < 8700	10 ≤ ESAL < 30	4
AADTT ≥ 8700	≥ 30	5

6-LANE ROAD

Design AADTT, trucks per day	Design ESALs, millions	QC/QA-HMA Category*
AADTT < 114	< 0.3	1
114 ≤ AADTT < 1140	0.3 ≤ ESAL < 3	2
1140 ≤ AADTT < 3800	3 ≤ ESAL < 10	3
3800 ≤ AADTT < 11400	10 ≤ ESAL < 30	4
AADTT ≥ 11400	≥ 30	5

8-LANE ROAD

* For open-graded mixtures OG 19.0 and OG 25.0, the QC/QA-HMA category is 5.

ESAL CATEGORY FOR QC/QA-HMA MIXTURES

Figure 52-9A

Design AADTT, trucks per day	Design ESALs, millions	HMA Category
AADTT < 51	< 0.3	A
51 ≤ AADTT < 510	0.3 ≤ ESAL < 3	B
510 ≤ AADTT < 1700	3 ≤ ESAL < 10	C
AADTT ≥ 1700	≥ 10	D

2-LANE ROAD

Design AADTT, trucks per day	Design ESALs, millions	HMA Category
AADTT < 57	< 0.3	A
57 ≤ AADTT < 570	0.3 ≤ ESAL < 3	B
570 ≤ AADTT < 1900	3 ≤ ESAL < 10	C
AADTT ≥ 1900	≥ 10	D

4-LANE ROAD

Design AADTT, trucks per day	Design ESALs, millions	HMA Category
AADTT < 87	< 0.3	A
87 ≤ AADTT < 870	0.3 ≤ ESAL < 3	B
870 ≤ AADTT < 2900	3 ≤ ESAL < 10	C
AADTT ≥ 2900	≥ 10	D

6-LANE ROAD

Design AADTT, trucks per day	Design ESALs, millions	HMA Category
AADTT < 114	< 0.3	A
114 ≤ AADTT < 1140	0.3 ≤ ESAL < 3	B
1140 ≤ AADTT < 3800	3 ≤ ESAL < 10	C
AADTT ≥ 3800	≥ 10	D

8-LANE ROAD

MIXTURE TYPE FOR HMA MIXTURES

Figure 52-9B

Treatment	Maximum of Full-Depth Area to be Patched
Preventative Maintenance	1%
CPR	3%
Functional	5%
Structural *	8%

* LCCA should be completed and compared with slab-reduction techniques.

PCCP PATCHING LIMITS

Figure 52-9C

Outlet Protector Type	Outside		Median	
	Flattest	Steepest	Flattest	Steepest
1 (large)	10:1	2:1	10:1	4:1
2 (medium)	7:1	1:1	7:1	3:1
3 (small)	3:1	1:1	3:1	1:1

OUTLET PROTECTOR SLOPE LIMITS

Figure 52-10A

Type 4 Pipe Used As Underdrain Pipe, m	Video Inspection Pay Quantity, m
1000 ≤ Type 4 Pipe < 10 000	1000
10 000 ≤ Type 4 Pipe < 25 000	2000
25 000 ≤ Type 4 Pipe < 50 000	3000
50 000 ≤ Type 4 Pipe < 100 000	4000
≥ 100 000	5000

VIDEO INSPECTION CONTRACT QUANTITIES

Figure 52-10B

Treatment	AADT [1]	Pavement Distresses	Rutting, mm	IRI	Friction Treatment?	Surface Aging
Crack Seal	Any	Low to Moderately Severe Surface Cracks	n/a	n/a	No	n/a
Fog Seal	< 5,000 [2]	Low-Severity Environmental Surface Cracks	n/a	n/a	No [3]	Reduces aging and oxidation; arrests minor raveling
Seal Coat	< 5,000 [2]	Low-Severity Environmental Surface Cracks	< 6 [4]	n/a [4]	Yes	Arrests aging, oxidation, and minor raveling
Microsurface	Any	Low-Severity Surface Cracks	Any	< 2050	Yes	Arrests aging, oxidation, and minor raveling
UBWC	Any	Low to Moderately Severe Surface Cracks	< 6	< 2210	Yes	Arrests aging, oxidation, and moderate raveling
HMA Inlay	Any	Low to Moderately Severe Surface Cracks	Any	< 2370	Yes	Replaces aged, oxidized, or raveled surface
HMA Overlay	Any	Low to Moderately Severe Surface Cracks	Any	< 2370	Yes	Arrests aging, oxidation, and moderate raveling

Notes:
1. For mainline pavement.
2. Unless traffic can be adequately controlled.
3. Treatment may reduce skid numbers.
4. Treatment does not address this.

HMA PM TREATMENTS

Figure 52-11A

Treatment	AADT[1]	Pavement Distresses	Rutting	IRI	Friction Treatment?	Surface Aging
Crack Seal	Any	Midpanel cracks with aggregate interlock	n/a	n/a	No	n/a
Saw and Seal Joints	Any	> 10% of joints with missing sealant, otherwise joints in good condition	n/a	n/a	No	n/a
Retrofit Load Transfer	Any	Low to medium severity mid-panel cracks; pumping or faulting at joints < 6 mm	n/a	n/a	No	n/a
Surface Profiling	Any	Faulting < 6 mm; poor ride; friction problems	n/a	n/a	No	n/a
Partial-Depth Patch	Any	Localized surface deterioration	n/a	n/a	Yes	n/a
Full-Depth Patch	Any	Deteriorated joints; faulting ≥ 6 mm; cracks	n/a	n/a	No	n/a
Underseal	Any	Pumping; voids under pavement	n/a	n/a	No	n/a
Slab Jacking	Any	Settled slabs	n/a	n/a	No	n/a

Note:
[1] On mainline pavement.

PCCP PM TREATMENTS

Figure 52-11B

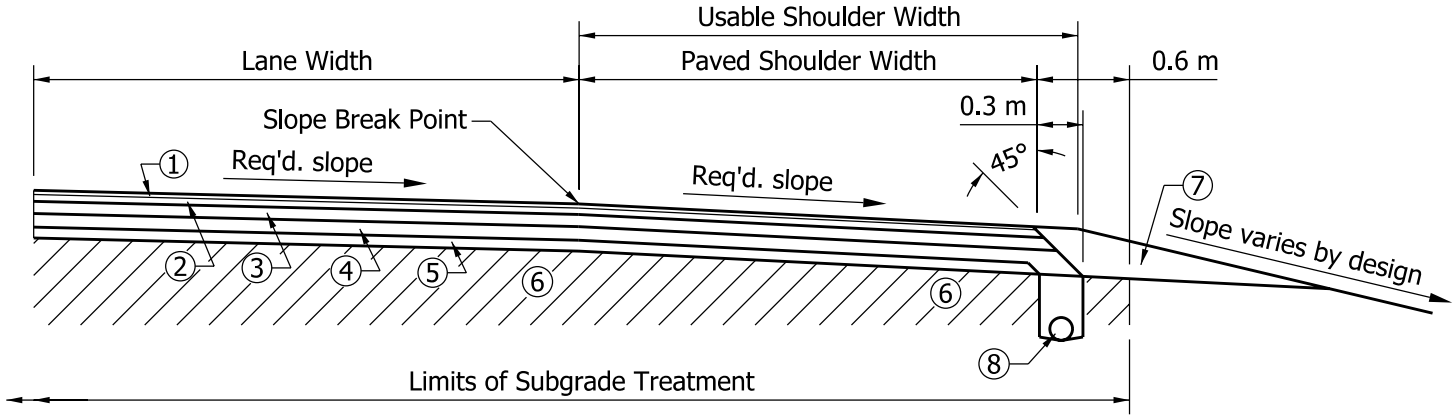

* <u>All Pavement, Including All Shoulders.</u> Configuration for Median Shoulder is the same as for an outside sholder.

1. 90 kg/m² HMA Surface 9.5 mm
2. 150 kg/m² HMA Intermediate 19.0 mm
3. 240 kg/m² Minimum HMA Base 25.0 mm
4. ** 140 kg/m² QC/QA-HMA Intermediate OG19.0 mm
5. 240 kg/m² HMA Base 25.0 mm
6. Subgrade Treatment. Type _____
7. Variable-Depth Compacted Aggregate, Size No. 53
8. Pipe, Type 4, Circular, 150 mm

* Open graded mixtures OG19.0 mm should be QC/QA-HMA, 5, 76. For all other mixtures, see Section 52-9.02 to determine the appropriate HMA mixture designation.

** If underdrain warrants are not satisfied, Intermediate OG19.0 mm mix should be replaced with 150 kg/m² HMA Base 25.0 mm, minimum 270 kg/m².

FULL-DEPTH HMA PAVEMENT WITH FULL-DEPTH SHOULDER

Figure 52-13A

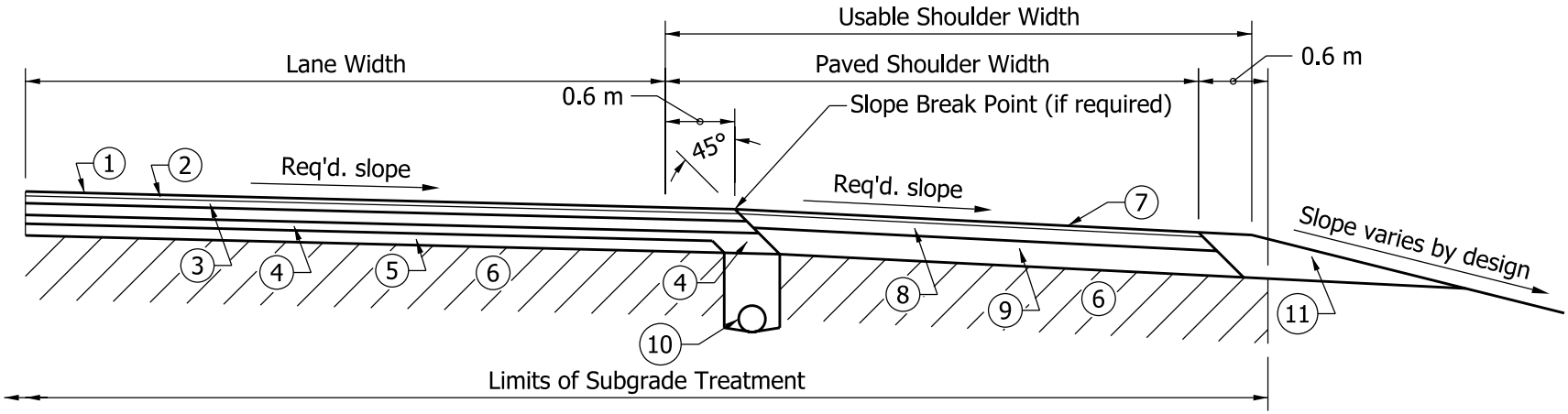

Mainline

1. 90 kg/m² HMA Surface 9.5 mm
2. 150 kg/m² HMA Intermediate 19.0 mm
3. _____ kg/m² HMA Base
4. _____ kg/m² QC/QA-HMA Intermediate OG
5. _____ kg/m² HMA Base
6. Subgrade Treatment, Type _____
10. Pipe, Type 4, Circular, 150 mm

Layer No.	Course	Layers, kg/m²	Aggregate Size, mm
3	Base	180	19
4	Intermediate OG	140	19
5	Base	240	25
		180	19

* Shoulders

7. 90 kg/m² HMA Surface 9.5 mm
8. 270 kg/m² HMA Base 25.0 mm
9. Compacted Aggregate, Size No. 53, Base
   (Depth equals mainline HMA thickness minus 150 mm)
11. Variable-Depth Compacted Aggregate, Size No. 53

* Open graded mixture OG19.0 mm should be QC/QA-HMA, 5, 76. For all other mixtures, see Section 52-9.02 to determine the appropriate HMA mixture designation.

FULL-DEPTH HMA PAVEMENT WITH COMPOSITE SHOULDER

Figure 52-13B

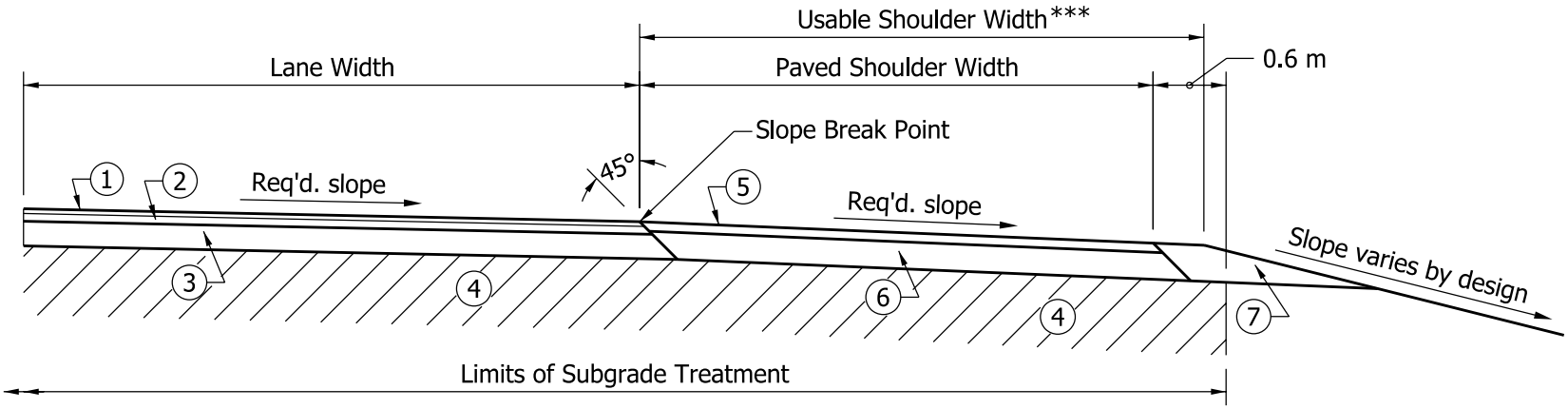

* Mainline (Section With Shoulders)

1. 90 kg/m² HMA Surface 9.5 mm
2. 150 kg/m² HMA Intermediate 19.0 mm
3. ** 360 kg/m² Min. HMA Base 19.0 mm or 25.0 mm
4. Subgrade Treatment, Type _____

* Shoulders

5. 180 kg/m² HMA Surface 9.5 mm
6. 175 mm Min. Compacted Aggregate, Size No. 53, Base. Depth equals mainline HMA thickness minus 75 mm. Or 5 & 6 may be replaced by 250 mm Min. Compacted Aggregate , Size No. 73
7. *** Variable-Depth Compacted Aggregate, Size No. 53 or No. 73

* Where underdrains are required, see Figure 52-13B.

** See Section 52-9.02 to determine the appropriate HMA mixture designation.

*** Earth may be substituted for compacted aggregate dependent on geometric requirements for the usable shoulder width outside the paved area.

FULL-DEPTH HMA PAVEMENT

Figure 52-13D

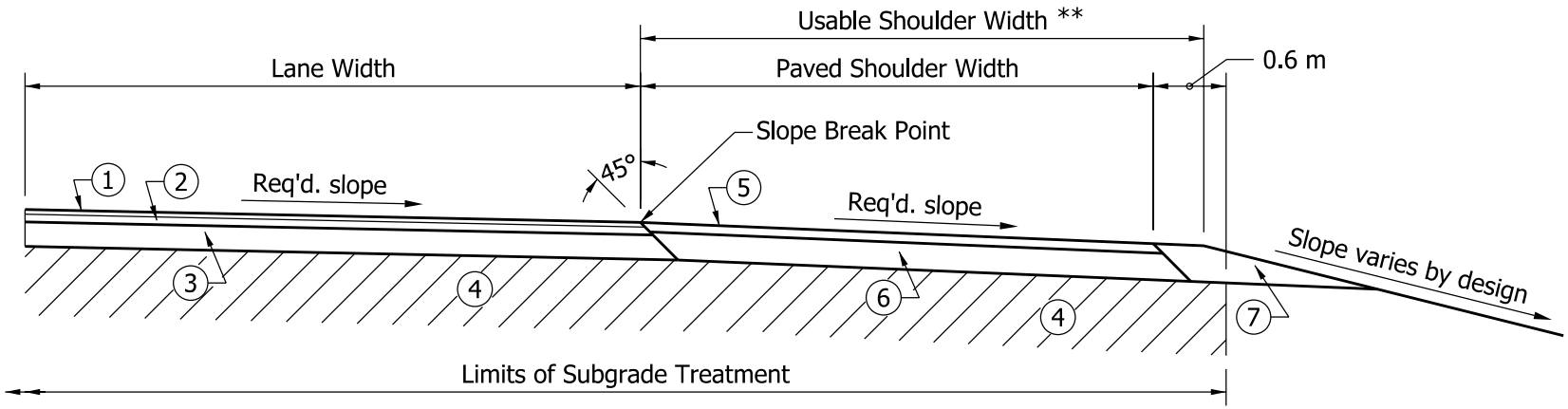

* Mainline (Section With Shoulders)

1. 90 kg/m² HMA Surface 9.5 mm
2. 150 kg/m² HMA Intermediate 19.0 mm
3. 150 mm Min. Compacted Aggregate, Size No. 53, Base
4. Subgrade Treatment, Type _____

Shoulders

5. 180 kg/m² HMA Surface 9.5 mm
6. 175 mm Min. Compacted Aggregate, Size No. 53, Base. Depth equals mainline HMA thickness minus 75 mm. Or 5 & 6 may be replaced by 250 mm Min. Compacted Aggregate, Size No. 73

** 7. Variable-Depth Compacted Aggregate, Size No. 53 or No. 73

* See Section 52-9.02 to determine the appropriate HMA mixture designation.

** Earth may be substituted for compacted aggregate dependent on geometric requirements for the usable shoulder width outside the paved area.

COMPOSITE HMA / COMPACTED AGGREGATE PAVEMENT

Figure 52-13E

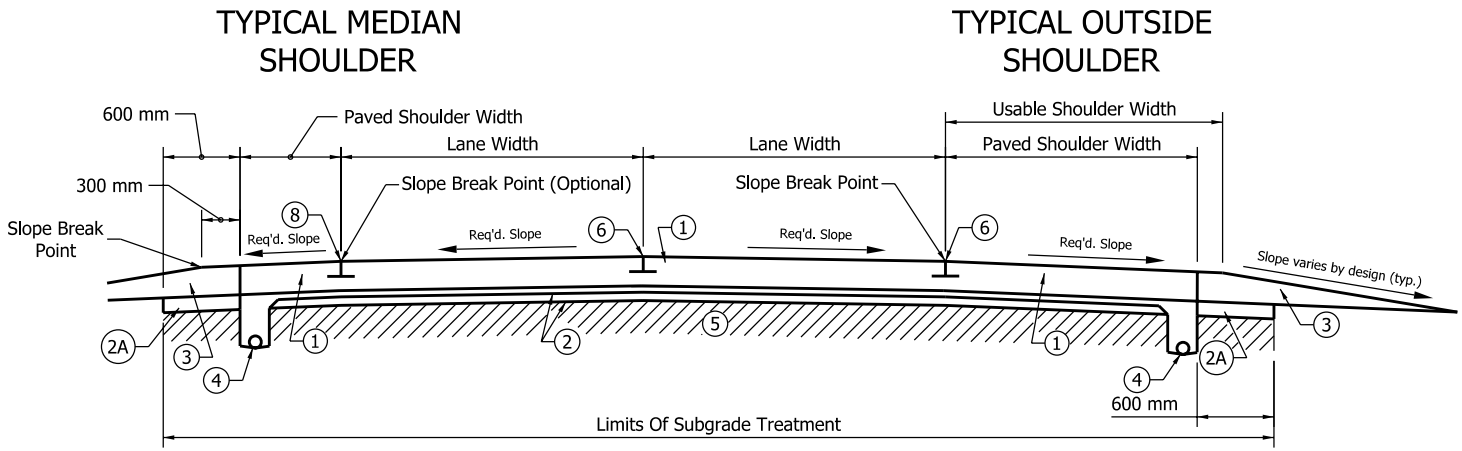

TYPICAL MEDIAN SHOULDER WITH BARRIER WALL

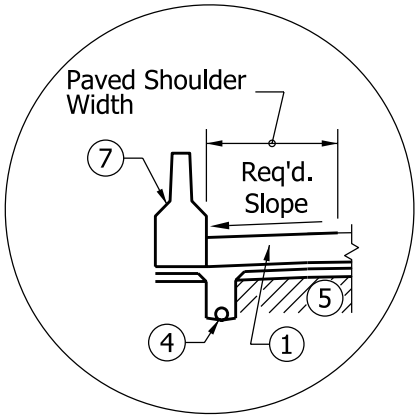

Mainline and Shoulders

1. PCCP
2. Subbase for PCCP (75 mm Coarse Aggregate No.8 On 150 mm Coarse Aggregate, Size No. 53)
2A. 150 mm Compacted Aggregate, Size No. 53
3. Variable-Depth Compacted Aggregate, Size No. 53
4. Pipe, Type 4, Circular, 150 mm
5. Subgrade Treatment, Type _____
6. Longitudinal Joint or Longitudinal Construction Joint. See Figure 52-13R for Pavement Joint Options.
7. Concrete Median Barrier
8. Longitudinal Joint or Longitudinal Construction Joint, or no Joint.
   See Figure 52-13R for Pavement-Joint Options.

* Where underdrains are not required, Dense Graded Subbase should be used.

PCCP SECTION WITH PCC SHOULDER

Figure 52-13F

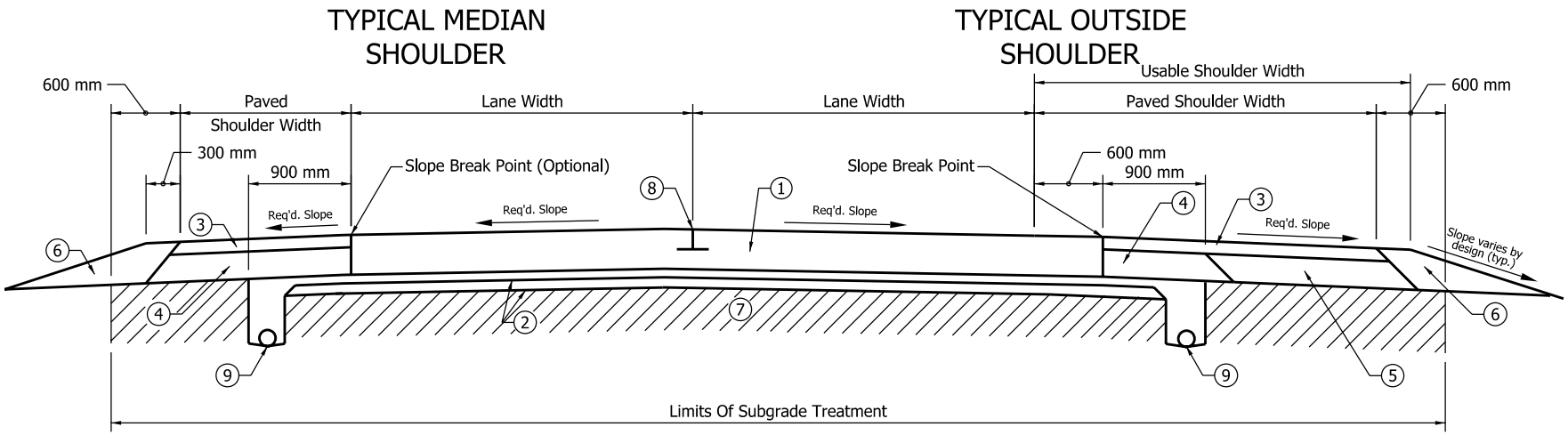

Mainline

(1) PCCP

* (2) Subbase for PCCP (75 mm Coarse Aggregate No.8 On 150 mm Coarse Aggregate, Size No. 53)

Shoulders

** (3) 90 kg/m² HMA Surface 9.5 mm
180 kg/m² HMA Intermediate 19.0 mm

** (4) HMA Base 25.0 mm

(5) Compacted Aggregate, Size No. 53, Base

(6) Variable-Depth Compacted Aggregate, Size No. 53

(7) Subgrade Treatment, Type _____

(8) Longitudinal Joint or Longitudinal Construction Joint.
Pipe, Type 4, Circular, 150 mm

* Where underdrains are not required, Dense Graded Subbase should be used. Limits should extend 600 mm beyond edge of concrete pavement. Compacted Aggregate, Size No. 53, Base should be used instead of HMA Base 25.0 mm.

** See Section 52-9.02 to determine the appropriate HMA mixture designation.

PCCP SECTION WITH HMA SHOULDER

Figure 52-13G

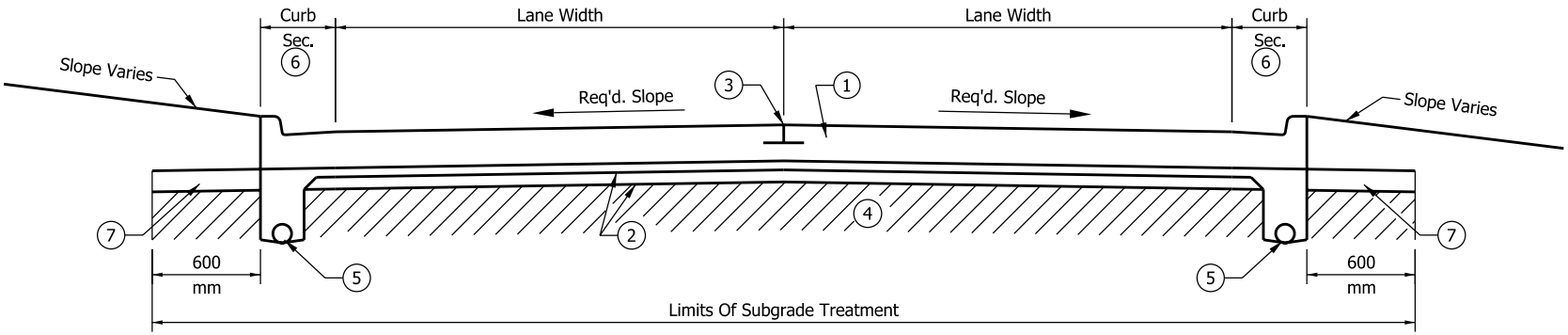

Mainline

1. PCCP
2. Subbase for PCCP (75 mm Coarse Aggregate #8 On 150 mm Coarse Aggregate, Size No. 53)
   Where underdrains are not required, Dense Graded Subbase should be used.
3. Longitudinal Joint or Longitudinal Construction Joint
4. Subgrade Treatment, Type _____
5. Pipe, Type 4, Circular, 150 mm
6. See Figure 52-13Q for Geotextile Installation Requirements for Curbs (Required Only With Underdrains)
7. 225 mm Compacted Aggregate, Size No. 53

PCCP WITH CONCRETE CURB

Figure 52-13H

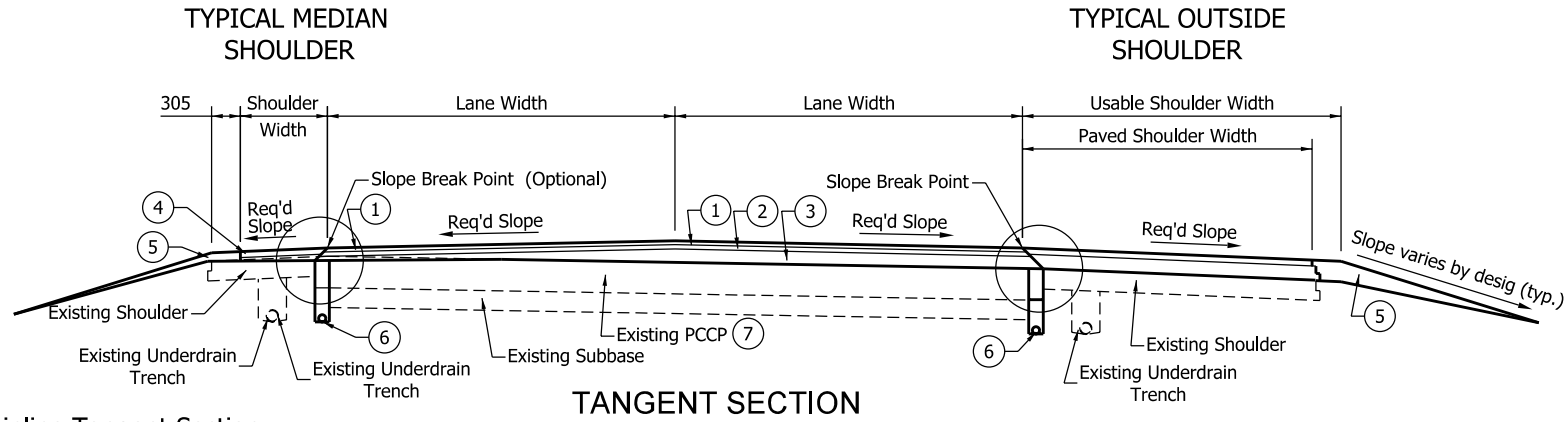

* Mainline Tangent Section

(1) 90 kg/m² HMA Surface 9.5 mm
(2) 120 kg/m² HMA Intermediate 12.5 mm
(3) Variable (110 kg/m² Min.) HMA Intermediate OG19.0 mm
Mill Existing PCCP 50mm Left Edge of Pavement to 0 mm at Center of Passing Lane, Mill Shoulder to Match Pavement

* Shoulder Tangent Section

(4) 90 kg/m² HMA Surface 9.5 mm on Variable HMA Intermediate 19.0 mm
(5) Compacted Aggregate, Size No. 53
(6) Pipe, Type 4, Circular, 100 mm

* Mainline Superelevated Section

(1) 90 kg/m² HMA Surface 9.5 mm
(2) 120 kg/m² HMA Intermediate 12.5 mm
(3) Variable (110 kg/m² Min.) HMA Intermediate OG19.0 mm to attain proper superelevation
(7) Do not mill Existing PCCP if superelevated

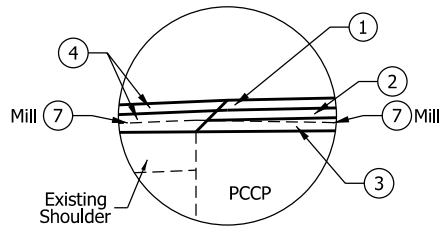

LEFT E.P. DETAIL

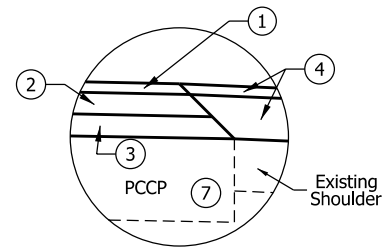

RIGHT E.P. DETAIL

* Open graded mixture OG19.0 mm should be QC/QA-HMA, 5, 76. For all other mixtures, see Section 52-9.02 to determine the appropriate HMA mixture designation.

OVERLAY, TILT TO CROWN SECTION, WITH DRAINAGE LAYER

Figure 52-13 I

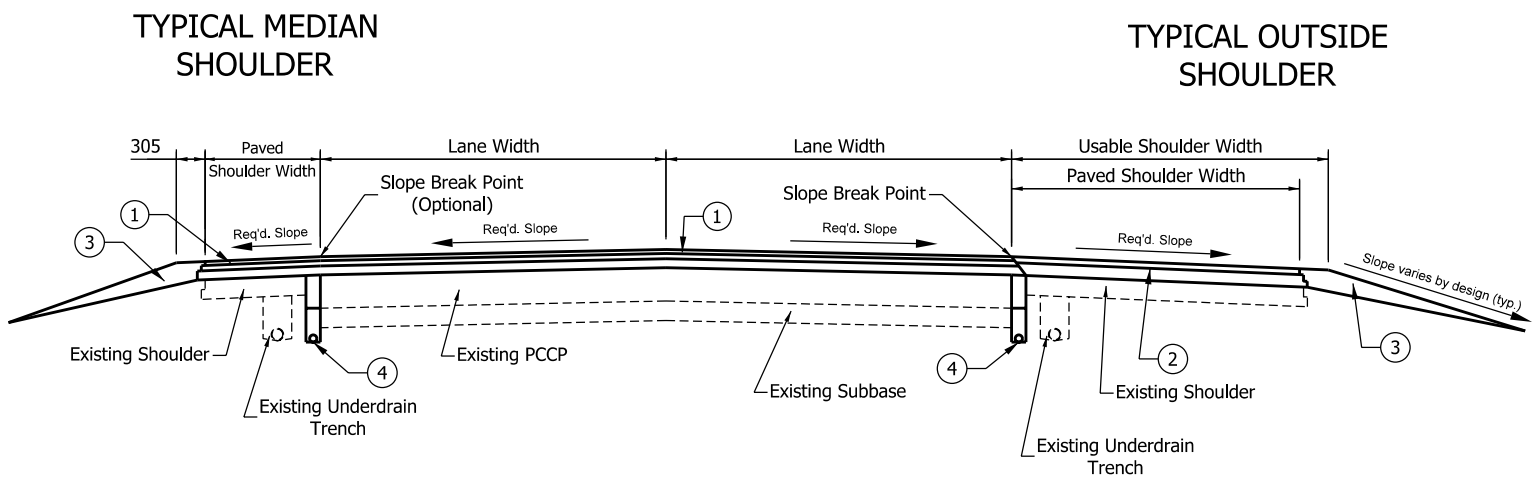

Mainline

(1) 90 kg/m² HMA Surface 9.5 mm
120 kg/m² HMA Intermediate 12.5 mm
Variable depth QC/QA-HMA, 5, 76, Intermediate OG19.0 mm
(110 kg/m² at Pavement Edge, 150kg/m² at ℄)

Shoulder

(2) 90 kg/m² HMA Surface 9.5 mm on
240 kg/m² HMA Base 25.0 mm
(3) Compacted Aggregate, Size No. 53
(4) Pipe, Type 4, Circular, 100 mm. See Figure 52-13K for Retrofit Underdrain Detail.

Note:
Open graded mixture OG19.0 mm should be QC/QA-HMA, 5, 76. For all other mixtures, see Section 52-9.02 to determine the appropriate HMA mixture designation.

OVERLAY, CROWN TO CROWN SECTION, WITH DRAINAGE LAYER

FIGURE 52-13J

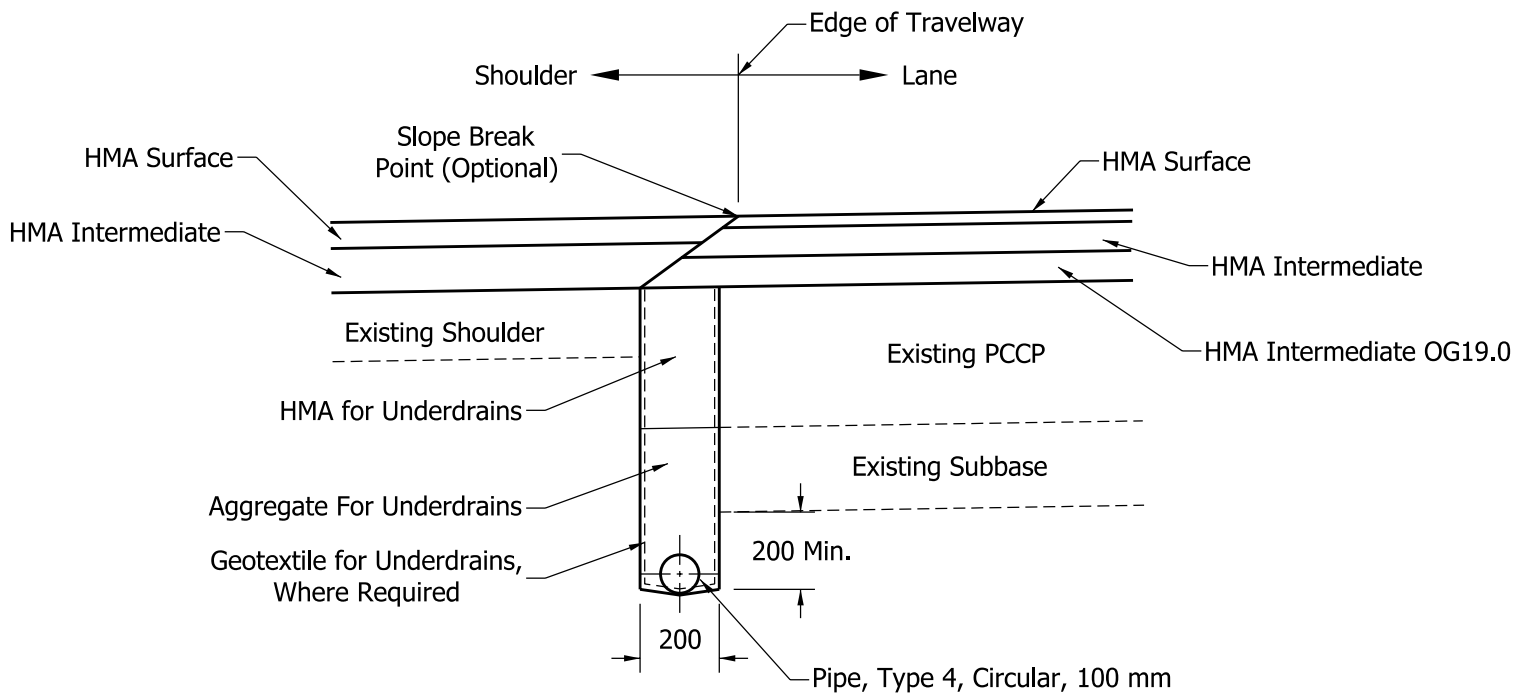

Notes:

1. Open graded mixture OG19.0 mm should be QC/QA-HMA, 5, 76. For all other mixtures, see Section 52-9.02 to determine the appropriate HMA mixture designation.

2. Median installation shown. Outside installation reversed as appropriate. However, slope break point is required.

3. See Figure 52-13J for treatment at median-side shoulder.

RETROFIT UNDERDRAIN

Figure 52-13K

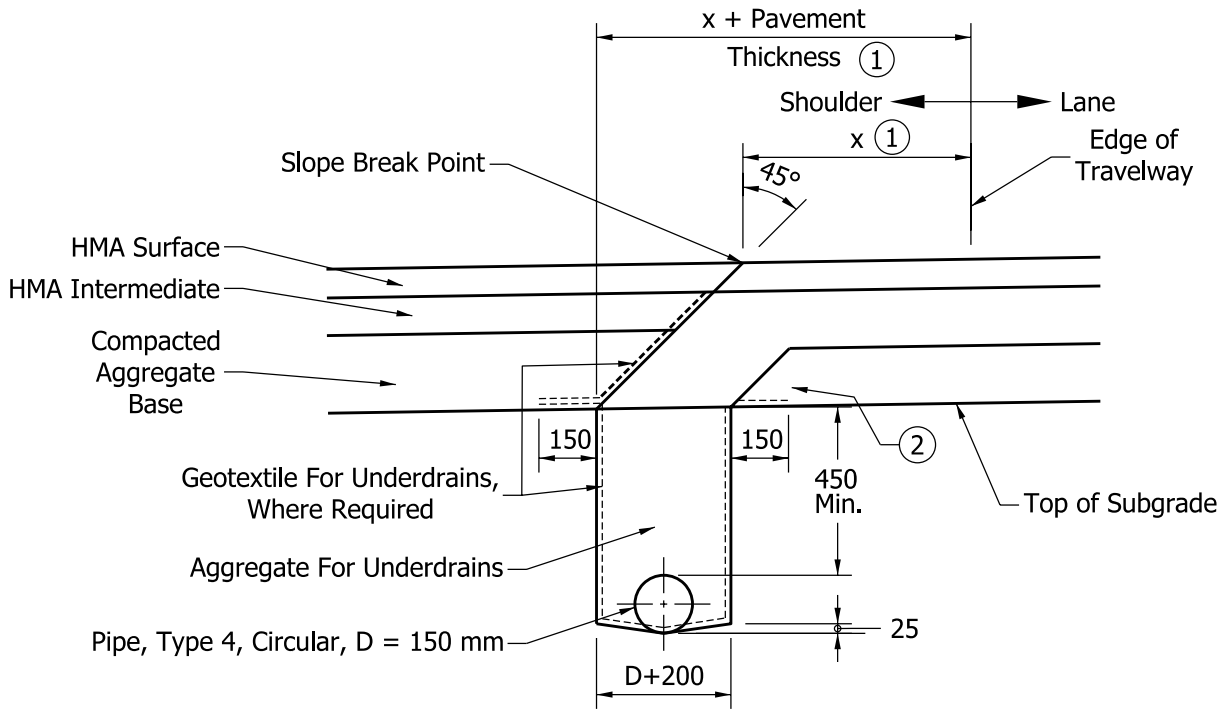

All dimensions are in mm unless otherwise noted.

NOTES:

1. Dimension x is 0.6 m min., 1.2 m max. See Fig. 45-1A(1).

2. Where a HMA Base 25.0 mm course is used, the geotextile fabric shall extend under the course.

3. Median Installation shown. Outside Installation Reversed as Applicable.

UNDERDRAIN FOR HMA PAVEMENT WITH COMPOSITE SHOULDER

Figure 52-13L

All dimensions are in mm
unless otherwise noted

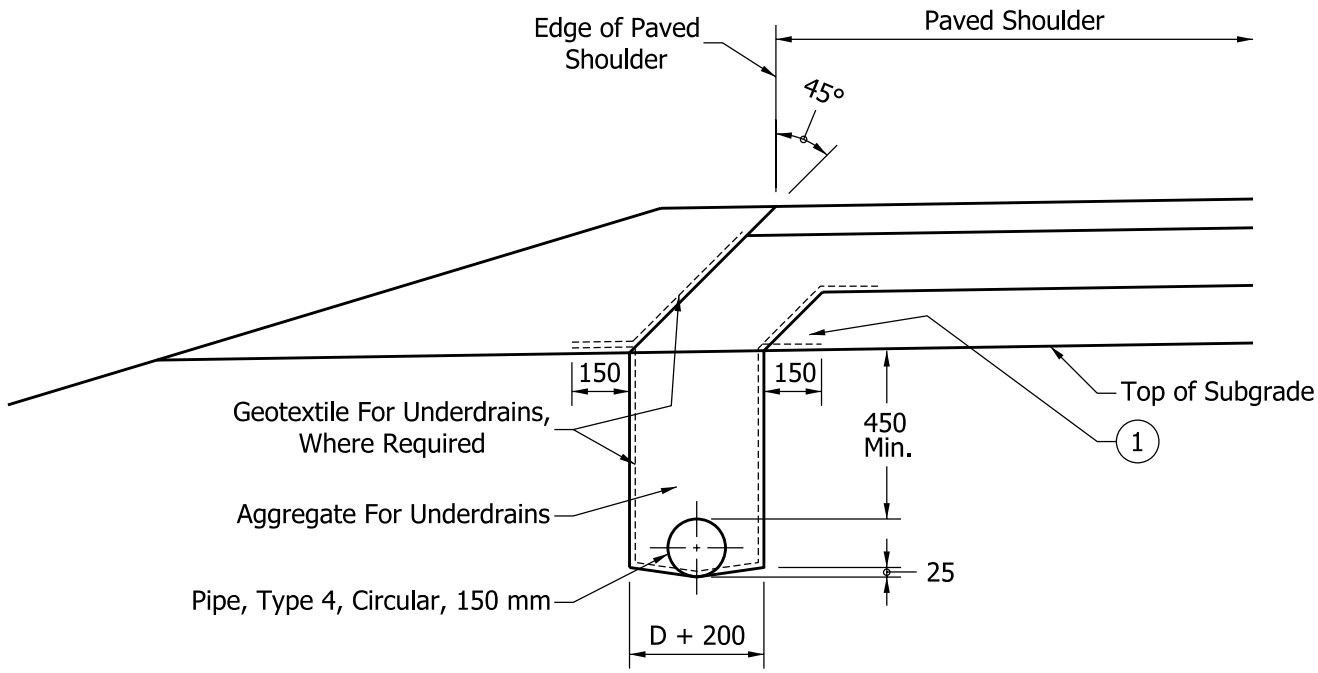

(1) Where a HMA Base 25.0 mm course is used, the geotextile fabric shall extend under the course.

2. Median Installation shown. Outside Installation Reversed as Applicable.

UNDERDRAIN FOR HMA PAVEMENT WITH FULL-DEPTH HMA SHOULDER

Figure 52-13M

All dimensions are in mm
unless otherwise noted

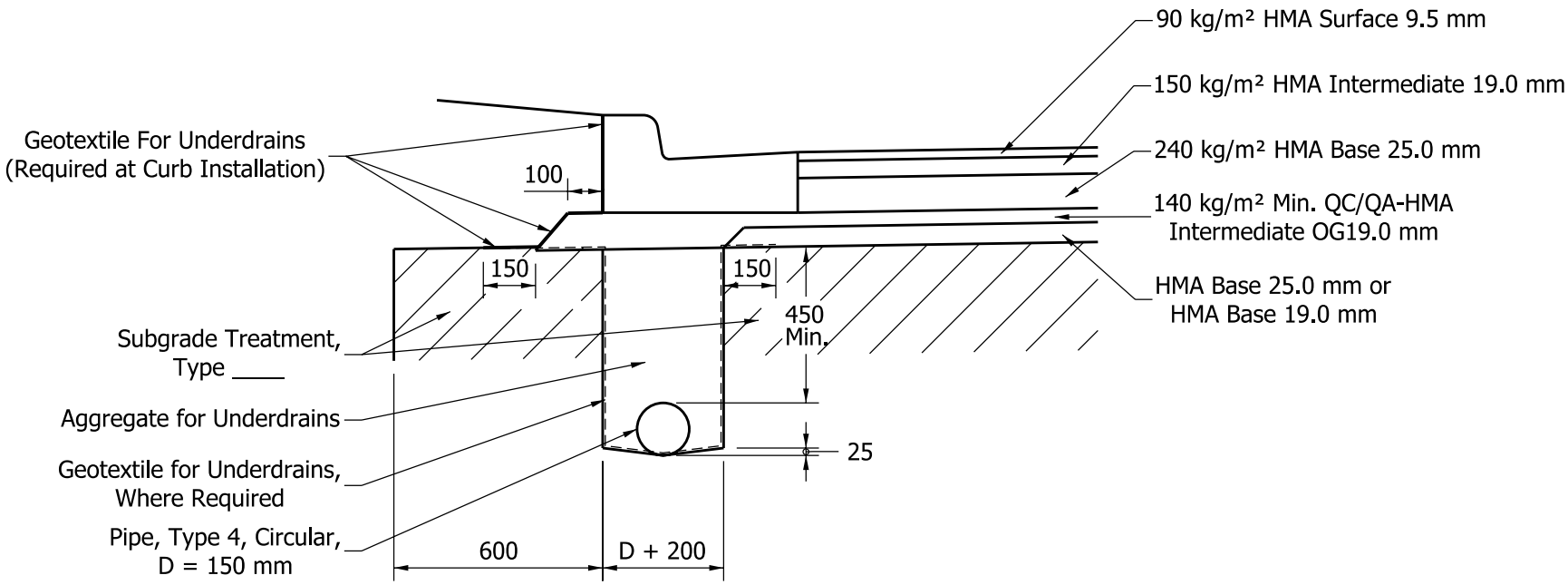

NOTE: Open graded mixtures OG19.0 mm or OG25.0 mm should be QC/QA-HMA, 5, 76. For all other mixtures, see Section 52-9.02 to determine the appropriate HMA mixture designation.

CONCRETE CURB AND GUTTER SECTION FOR HMA PAVEMENT WITH UNDERDRAIN

Figure 52-13N

All dimensions are in mm
unless otherwise noted

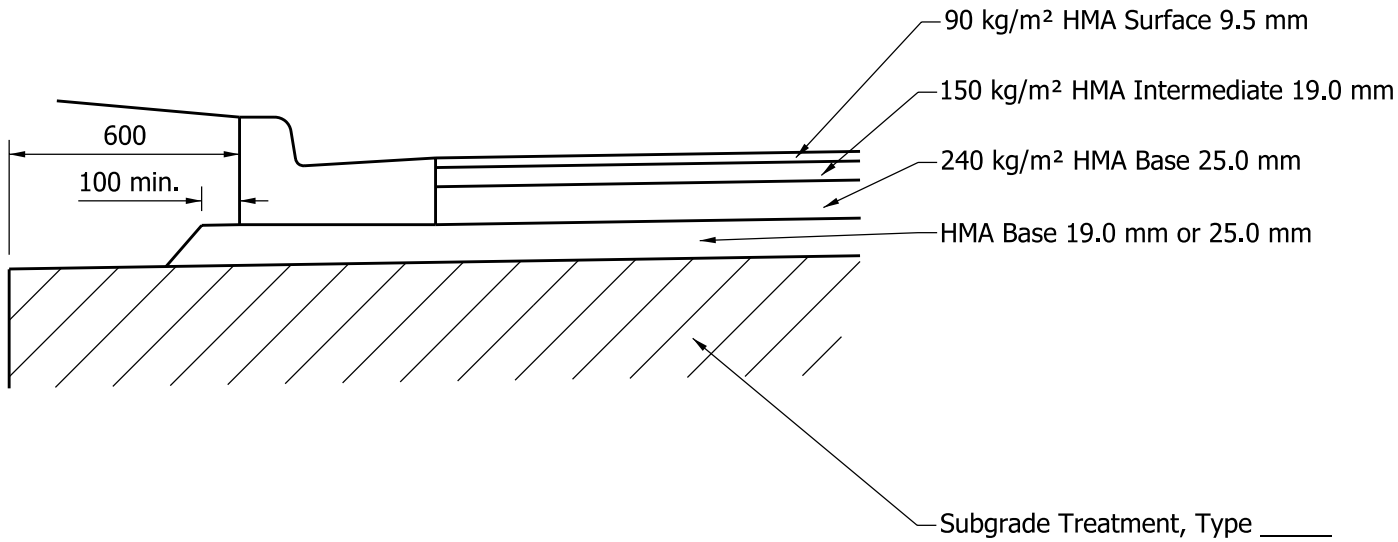

NOTE: See Section 52-9.02 to determine the appropriate HMA mixture designation.

CONCRETE CURB AND GUTTER SECTION FOR HMA PAVEMENT WITHOUT UNDERDRAIN

Figure 52-13 O

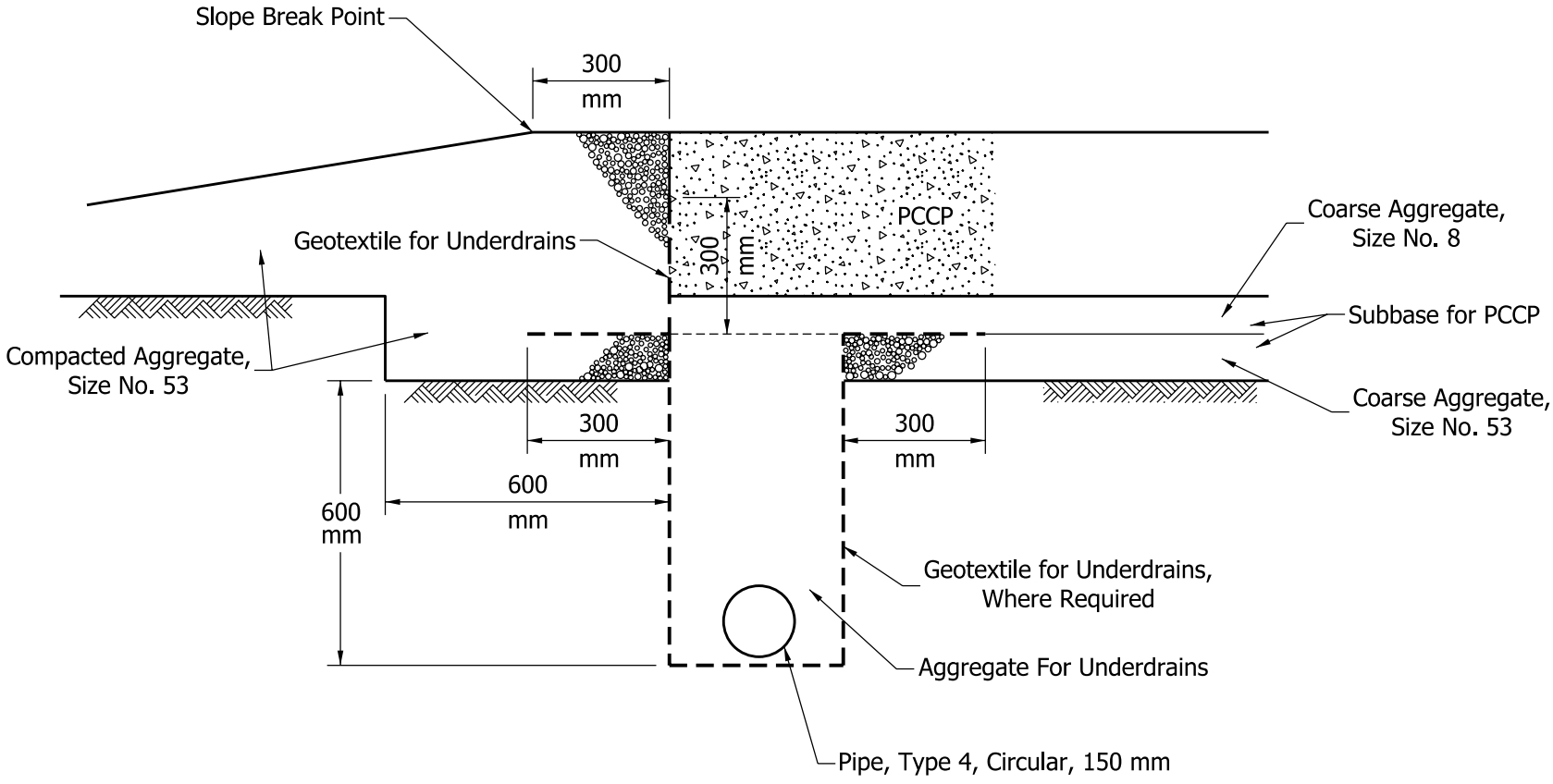

PCCP WITH UNDERDRAIN

Figure 52-13P

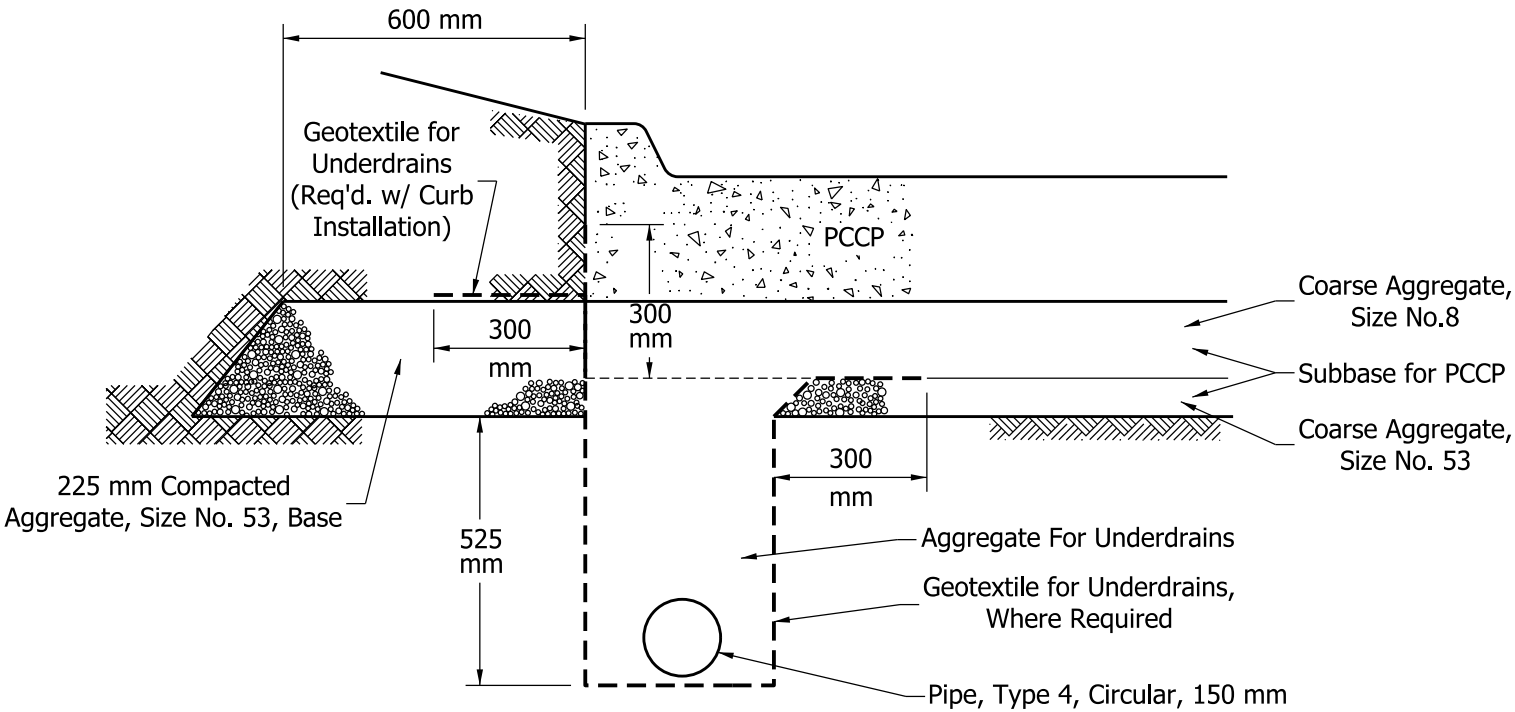

CURBED PCCP
WITH UNDERDRAIN

Figure 52-13Q

Note: Option to be determined by the contractor.

OPTIONS A AND B:

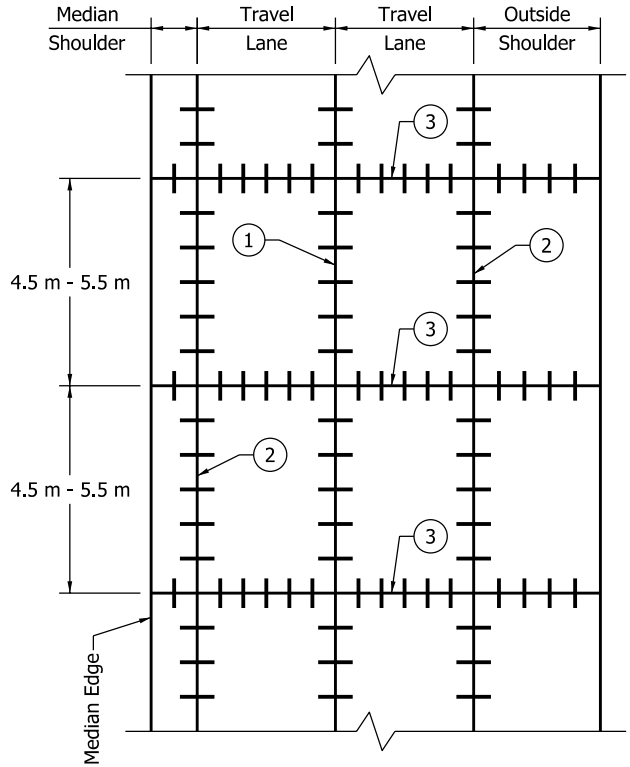

① Longitudinal Joint

② Option A: Longitudinal Joint
Option B: Longitudinal Constr. Joint

③ Type D-1 Contraction Joint

④ Longitudinal Joint or
Longitudinal Constr. Joint

OPTIONS C:

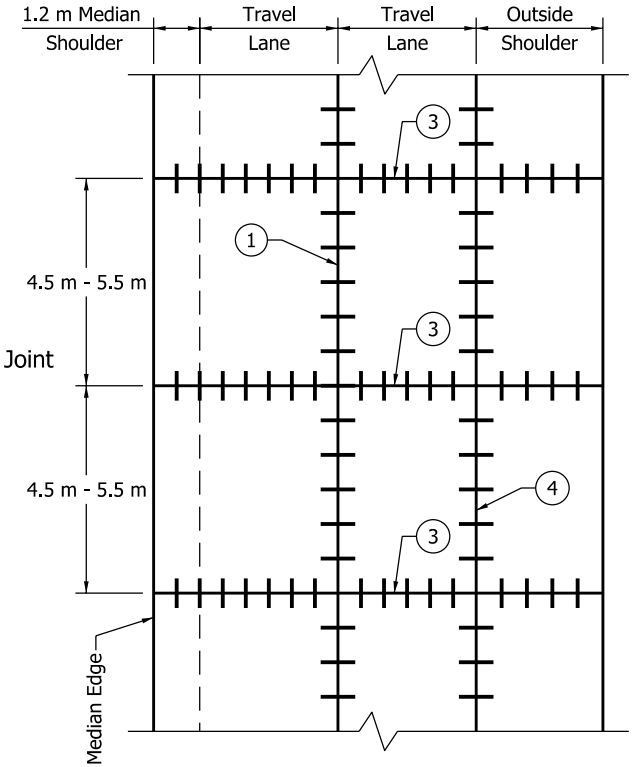

MEDIAN EDGE OF CONCRETE PAVEMENT LONGITUDINAL JOINT OPTIONS

Figure 52-13R

* Open graded mixtures OG19.0 mm or OG25.0 mm should be QC/QA-HMA, 5, 76. For all other mixtures, see Section 52-9.02 to determine the appropriate HMA mixture designation.

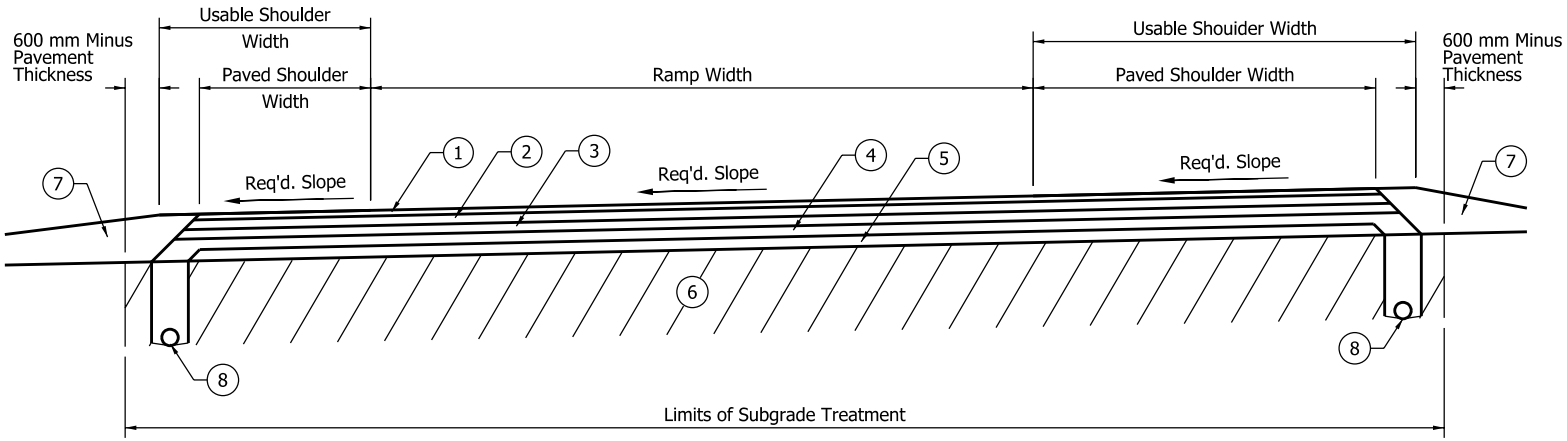

* Ramp

1. 90 kg/m² HMA Surface 9.5 mm
2. 150 kg/m² HMA Intermediate 19.0 mm
3. 180 kg/m² Minimum HMA Base 19.0 mm or HMA Intermediate 19.0 mm
4. 140 kg/m² QC/QA-HMA Intermediate OG19.0 mm
5. 180 kg/m² QC/QA HMA Minimum Base 19.0 mm or HMA Intermediate 19.0 mm
6. Subgrade Treatment, Type _____
7. Variable-Depth Compacted Aggregate, Size No. 53
8. Pipe, Type 4, Circular, 150 mm

FULL-DEPTH HMA RAMP

Figure 52-13S

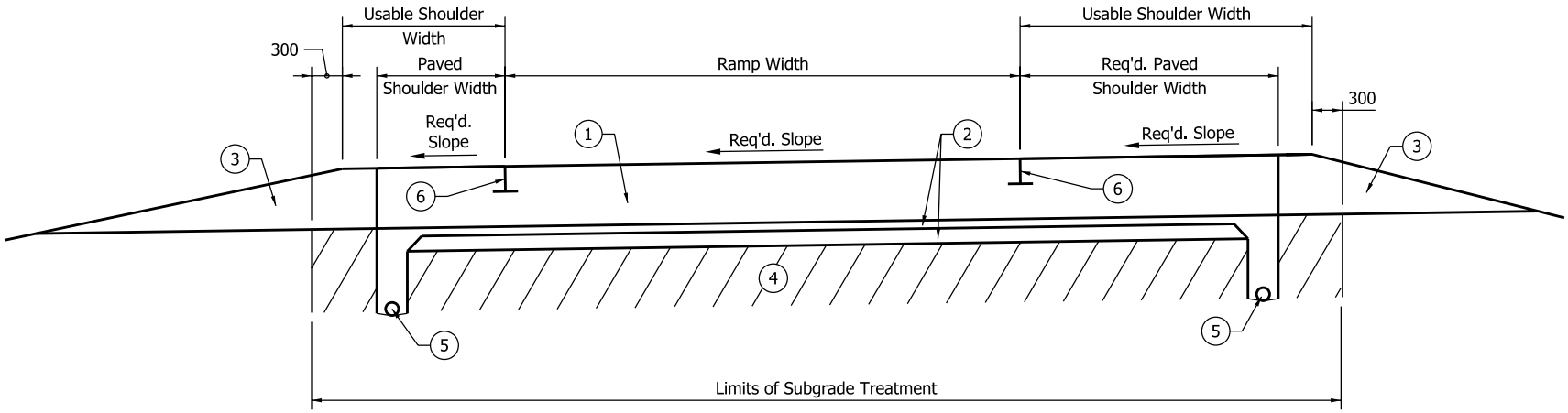

Ramp

1. PCCP
2. Subbase for PCCP (75 mm Coarse Aggregate, Size No. 8 on 150 mm Coarse Aggregate, Size No. 53)
3. Variable Depth Compacted Aggregate, Size No. 53
4. Subgrade Treatment, Type _____
5. Pipe, Type 4, Circular, 150 mm
6. Longitudinal Joint or Longitudinal Construction Joint. See Figure 52-13R for Pavement Joint Options.

PCCP RAMP

Figure 52-13T

Note:

Open graded mixture OG19.0 mm should be QC/QA-HMA, 5, 76. For all other mixtures, see Section 52-9.02 to determine the appropriate HMA mixture designation.

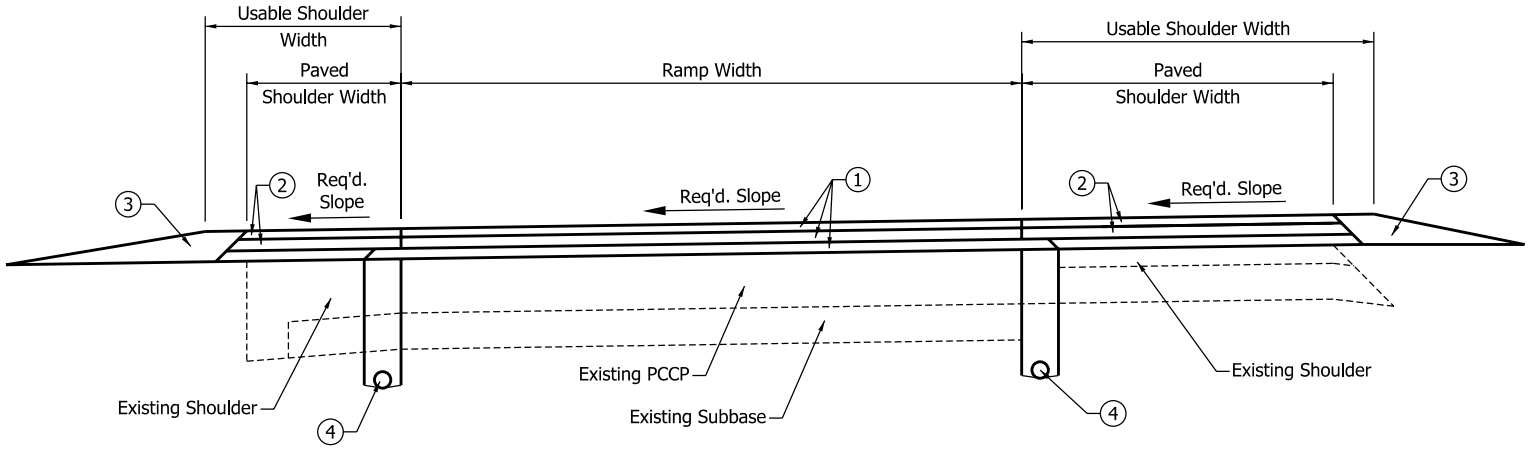

Ramp

1. 90 kg/m² HMA Surface 9.5 mm on
   120 kg/m² HMA Intermediate 12.5 mm on
   140 kg/m² QC/QA-HMA, 5, 76, Intermediate OG19.0 mm

Shoulder

2. 90 kg/m² HMA Surface 9.5 mm on
   240 kg/m² HMA Base 25.0 mm
3. Variable-Depth Compacted Aggregate, Size No. 53
4. Pipe, Type 4, Circular, 100 mm See Figure 52-13K for Retrofit Underdrain Detail

RAMP WITH OVERLAY

Figure 52-13U

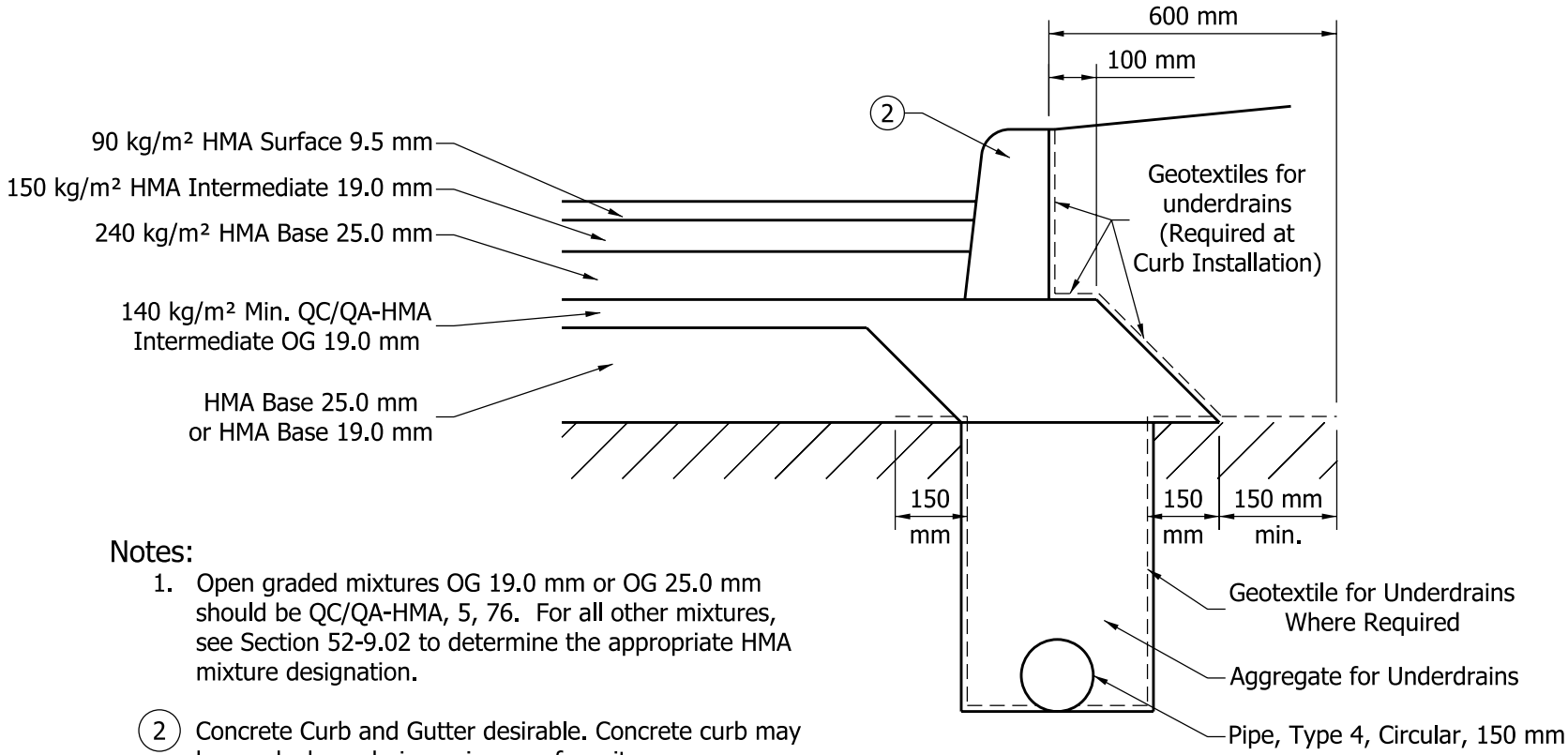

Notes:

1. Open graded mixtures OG 19.0 mm or OG 25.0 mm should be QC/QA-HMA, 5, 76. For all other mixtures, see Section 52-9.02 to determine the appropriate HMA mixture designation.

(2) Concrete Curb and Gutter desirable. Concrete curb may be used where drainage is away from it.

HMA PAVEMENT WITH CONCRETE CURB AND UNDERDRAIN

Figure 52-13V

Notes:
See Section 52-9.02 to determine the appropriate HMA mixture designation.

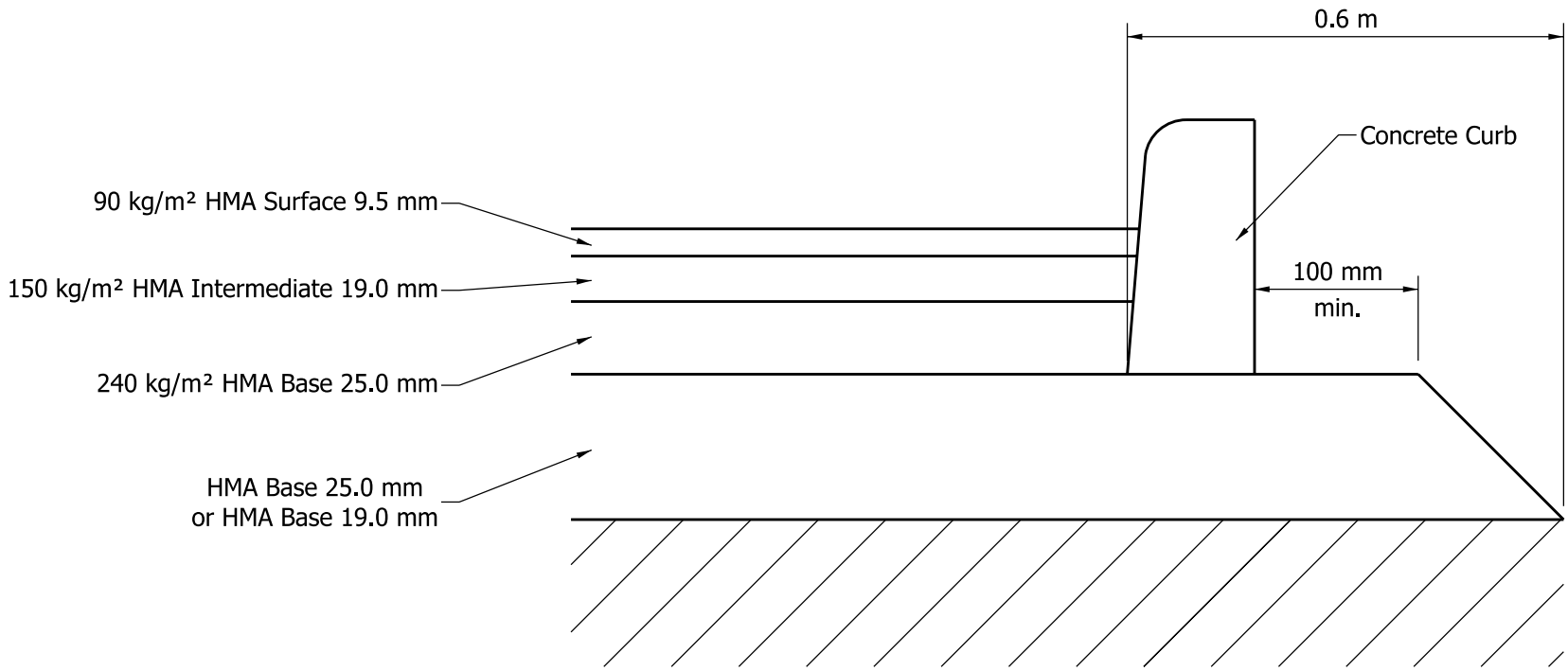

HMA PAVEMENT WITH CONCRETE CURB AND NO UNDERDRAIN

Figure 52-13W

Light-Duty HMA / Aggregate Composite Section
(Equivalent to Class II Drive Section):

90 kg/m^2 HMA Surface Type A on
150 kg/m^2 Intermediate Type A on
200 mm Min. Compacted Aggregate, size No. 53, Base

Medium-Duty HMA / Aggregate Composite Section
(Equivalent to Class IV Drive Section):

90 kg/m^2 HMA Surface Type B on
150 kg/m^2 Intermediate Type B on
200 mm Min. Compacted Aggregate, size No. 53, Base

Heavy-Duty HMA / Aggregate Composite Section
(Equivalent to Class VI Drive Section):

90 kg/m^2 HMA Surface Type B on
330 kg/m^2 Intermediate Type B on
250 mm Min. Compacted Aggregate, size No. 53, Base

PCCP Section:

150 mm Min. PCCP on
150 mm Dense Grade Sub-base

PARKING-LOT PAVEMENT SECTIONS

Figure 52-13X

PAVEMENT DESIGN REQUEST – INDOT PROJECT

Route: (1) County Name and Number: (2)
Des No.: (3) _ Project Length: (4) Rural ☐ Urban ☐
Pavement Scope: (5)
Pavement History: (6)
Existing Pavement: (7) Type, ; Width ; Thickness
Existing Shoulder or Curb Condition: (8)
Existing Underdrains: (9) Yes ☐ No ☐
Adjacent Pavement Types: (10) Before, ; After,
Posted Speed Limit: (11) mph; Number of Stop Conditions: (12)
Lanes Number and Width: (13) Travel Lanes, @ , Turn Lanes, @
Proposed Shoulder Width or Curb Type: (14)

Date Geotechnical Report Approved:
Geotechnical Considerations: (15) CBR , Resilient Modulus ,
k value (modulus of subgrade reaction) ,
Type of Subgrade Treatment ,
Other:

Design Data:
Construction Year: (16) 20 , AADT: (17)
Design Year: (18) 20 ; AADT: (19)
AADT Percent Trucks: (20)

Desired Pavement Type: PCCP ☐ HMA ☐
Reason: (21)

Submitted By: (22) Date:

PAVEMENT DESIGN REQUEST – LPA PROJECT

Route Name or Number: (1) Local Public Agency: (2)
Des No.: (3) _ Project Length: (4) Rural ☐ Urban ☐
Pavement Scope: (5)
Pavement History: (6)
Existing Pavement: (7) Type, ; Width ; Thickness
Existing Shoulder or Curb Condition: (8)
Existing Underdrains: (9) Yes ☐ No ☐
Adjacent Pavement Types: (10) Before, ; After,
Posted Speed Limit: (11) mph; Number of Stop Conditions: (12)
Lanes Number and Width: (13) Travel Lanes, @ , Turn Lanes, @
Proposed Shoulder Width or Curb Type: (14)

Date Geotechnical Report Approved:
Geotechnical Considerations: (15) CBR , Resilient Modulus ,
k value (modulus of subgrade reaction) ,
Type of Subgrade Treatment ,
Other:

Design Data:
Construction Year: (16) 20 , AADT: (17)
Design Year: (18) 20 ; AADT: (19)
AADT Percent Trucks: (20)

Desired Pavement Type: PCCP ☐ HMA ☐
Reason: (21)

LCCA Completed: (23) Yes ☐ No ☐

Proposed Pavement Section: (24)

Recommended By: (22) Date:

Registration Seal (26)

Approved: _____ Date:
INDOT Pavement Design Engineer