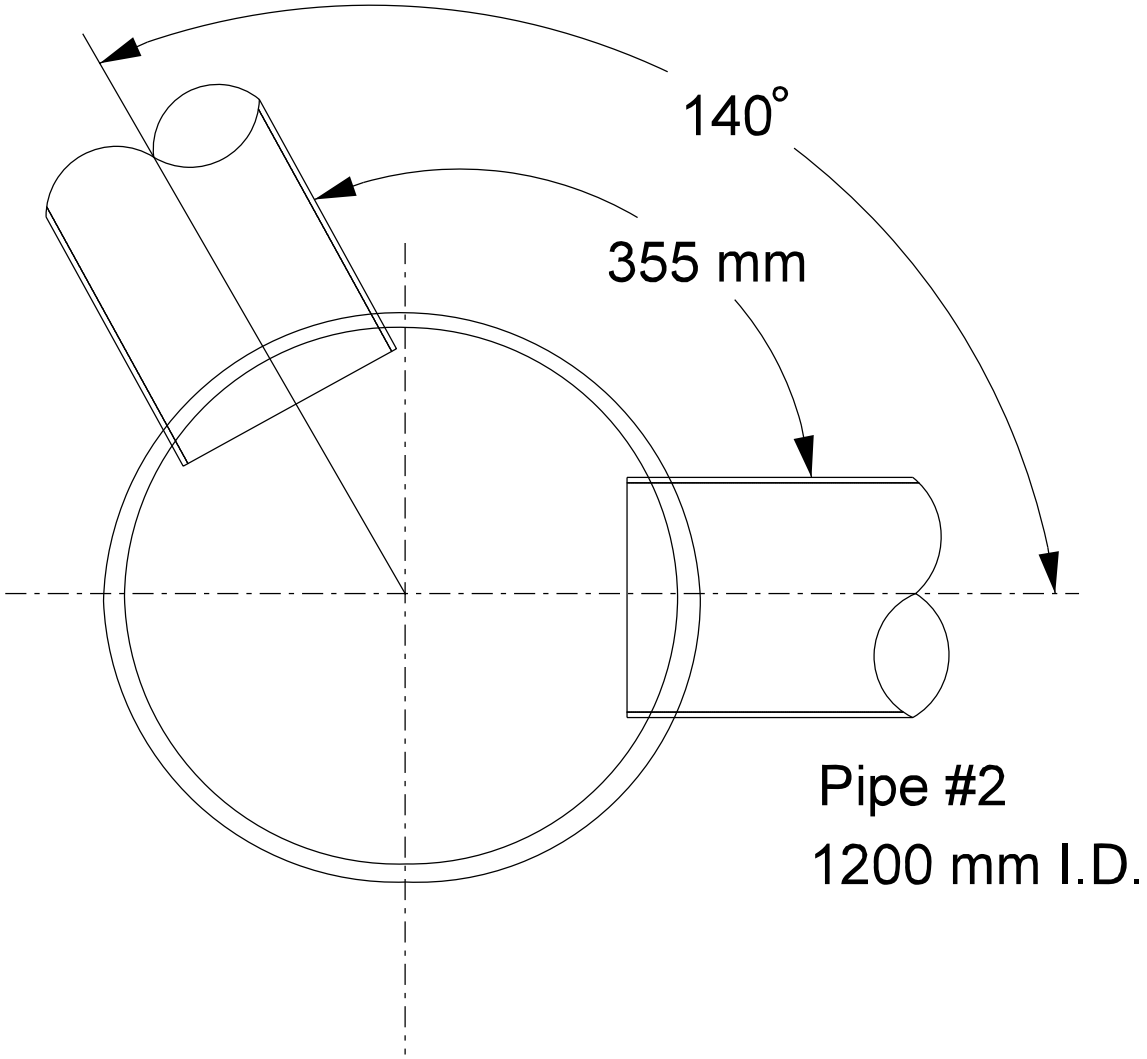

PIPE LAYOUT FOR EXAMPLE PROBLEM 36-11.1

Figure 36-11C