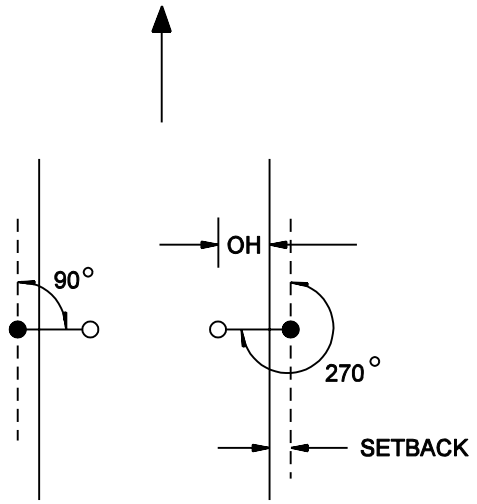

ORIENTATION ANGLE
OVERHANG (OH)
(PLAN VIEW)

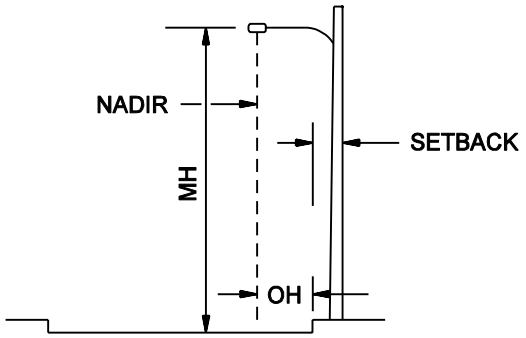

MOUNTING HEIGHT (MH)
(PROFILE VIEW)

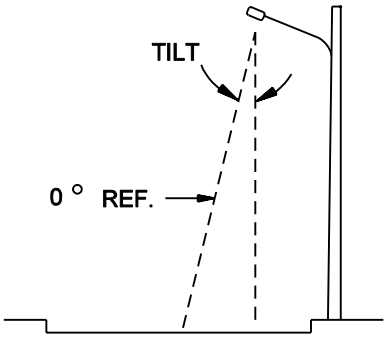

TILT ANGLE

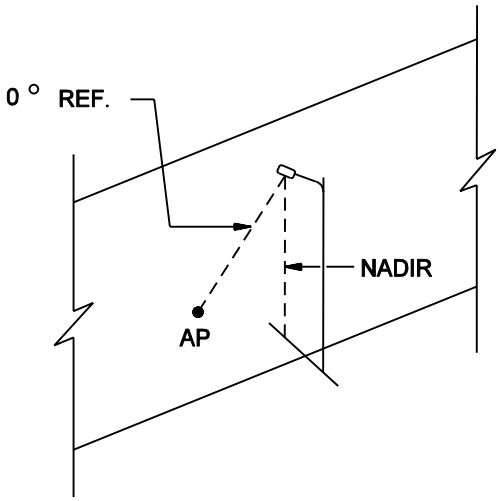

AIMING POINT (AP)

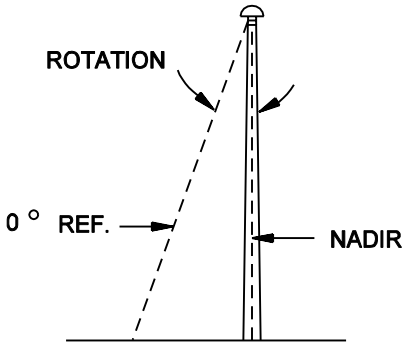

ROTATION ANGLE

LUMINAIRE GEOMETRY

Figure 78-6C