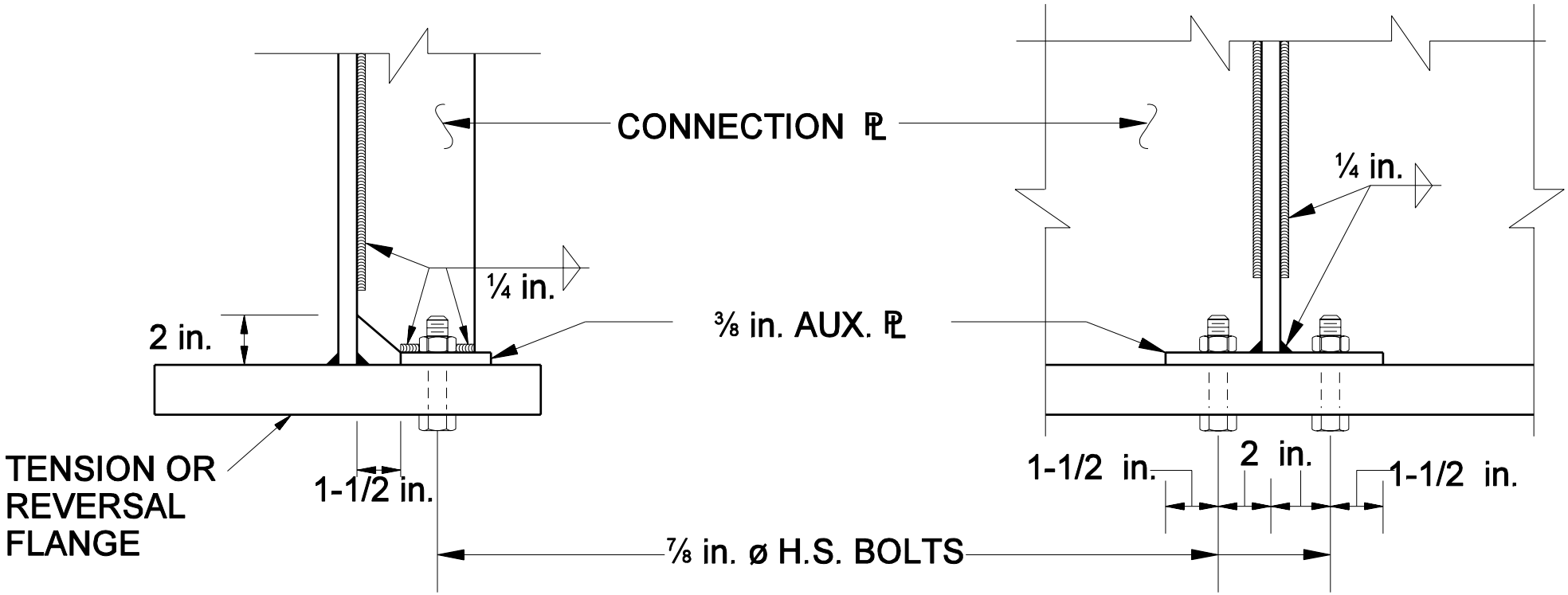

ALTERNATIVE CONNECTION PLATE ATTACHMENT AT TENSION OR REVERSAL FLANGE

Figure 64-5E