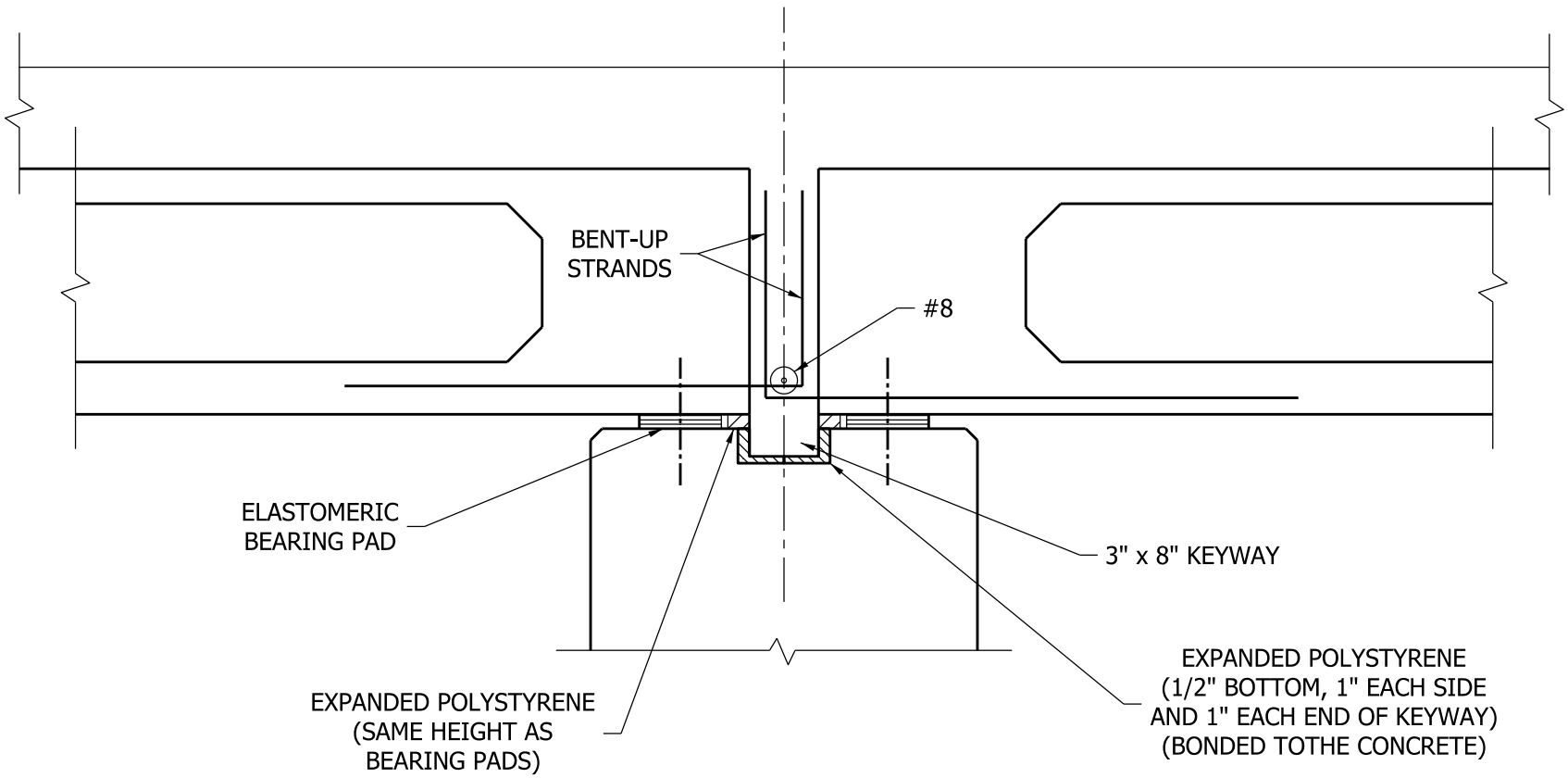

BOX BEAM
CLOSURE POUR AT PIER
FOR ADJACENT BEAMS

Figure 63-16R