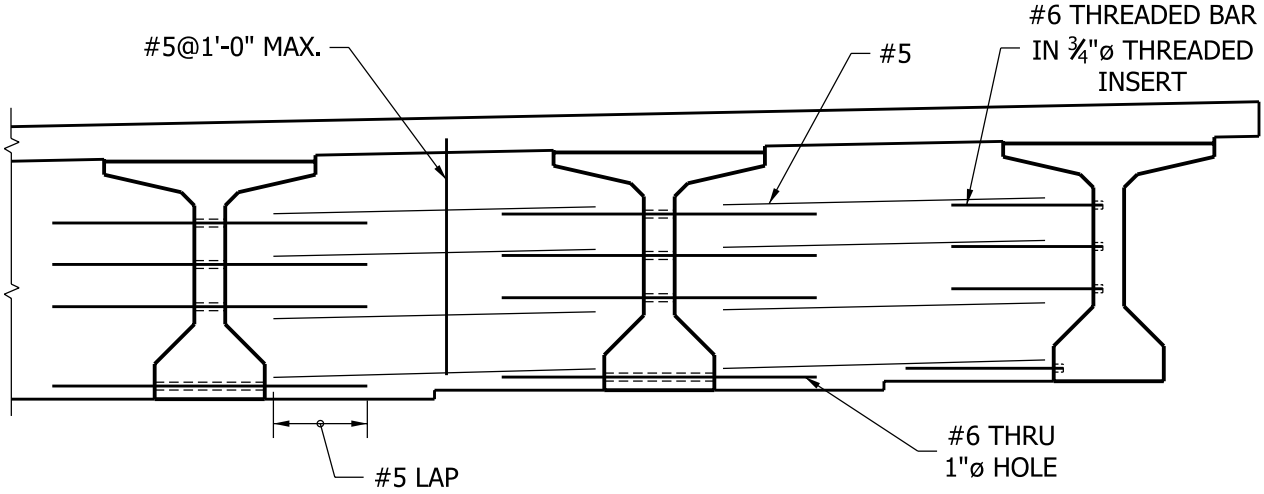

PIER

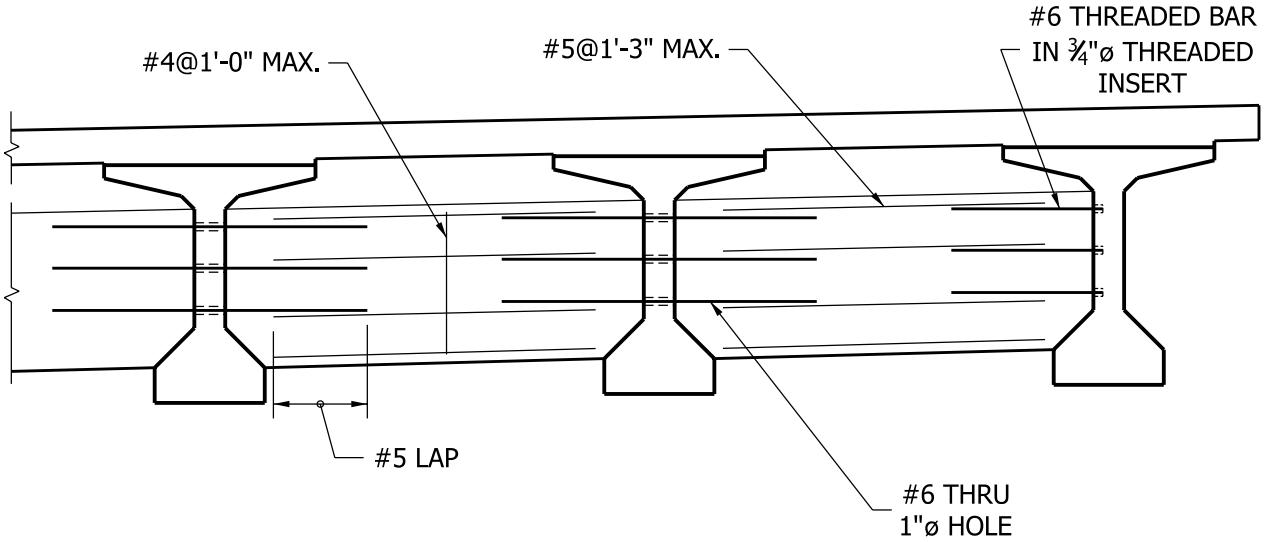

INTERMEDIATE

BULB-TEE DIAPHRAGM

Figure 63-16K