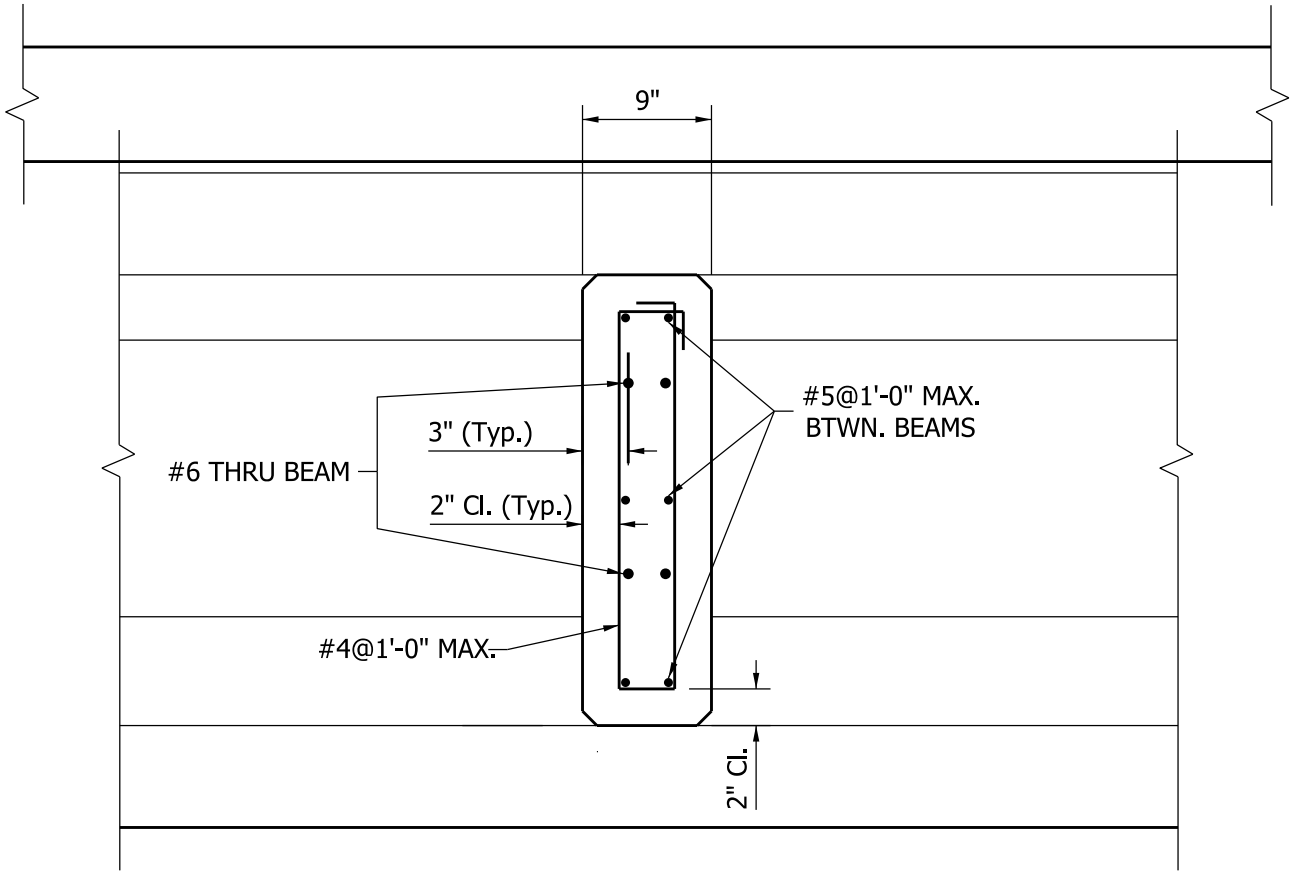

I-BEAM
INTERMEDIATE DIAPHRAGM

Figure 63-16C