**BEAM PROPERTIES**

$A_B$ = 878 $in^2$
$I_B$ = 205,798 $in^4$
$S_{TB}$ = 9,721 $in^3$
$S_{BB}$ = 9,880 $in^3$
$Y_{TB}$ = 21.17 in
$Y_{BB}$ = 20.83 in
Wt. = 915 lbs/ft

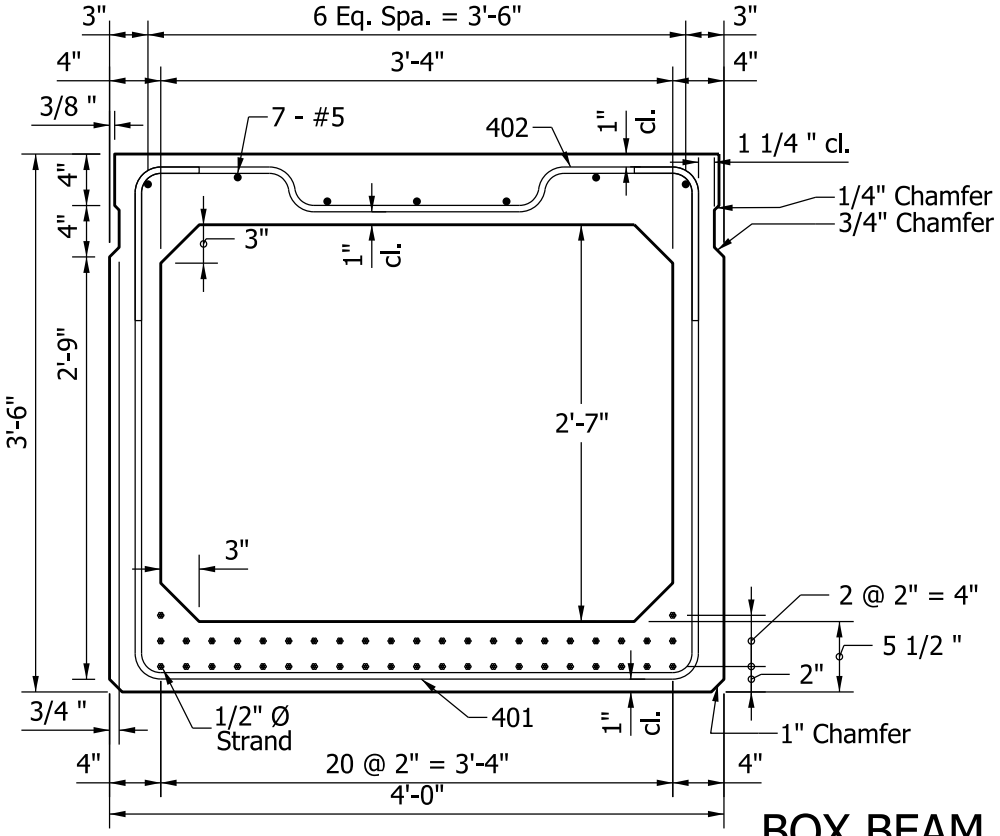


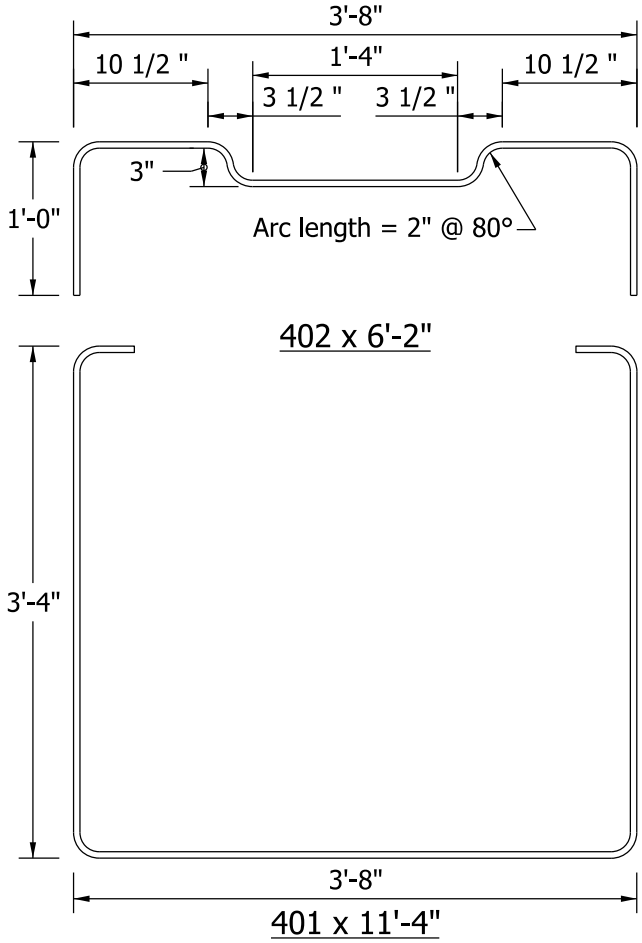


# BOX BEAM
# TYPE WS 42 x 48

Figure 63-15R