BEAM PROPERTIES

A_B = 713 in^2
I_B = 66,216 in^4
S_{TB} = 4,865 in^3
S_{BB} = 4,945 in^3
Y_{TB} = 13.61 in
Y_{BB} = 13.39 in
Wt. = 743 lbs/ft

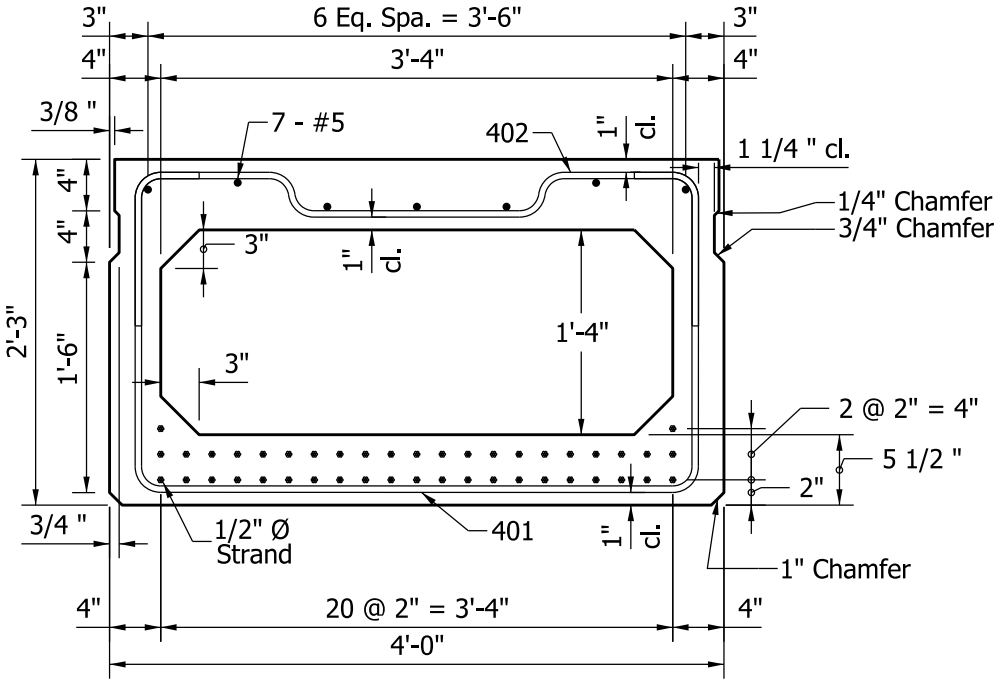

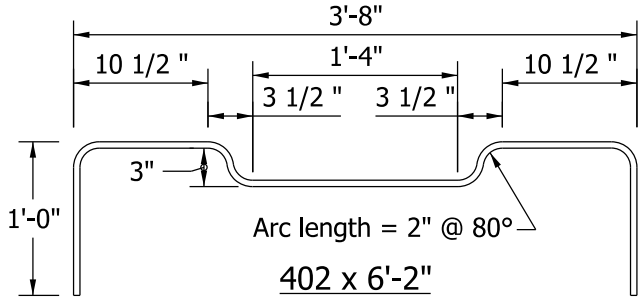

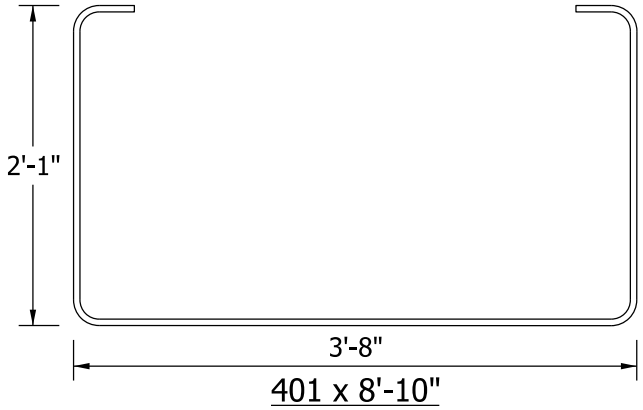

BOX BEAM
TYPE WS 27 x 48

Figure 63-15P