BEAM PROPERTIES

A_B = 567 in^2
I_B = 6,852 in^4
S_{TB} = 1,138 in^3
S_{BB} = 1,146 in^3
Y_{TB} = 6.02 in
Y_{BB} = 5.98 in
Wt. = 591 lbs/ft

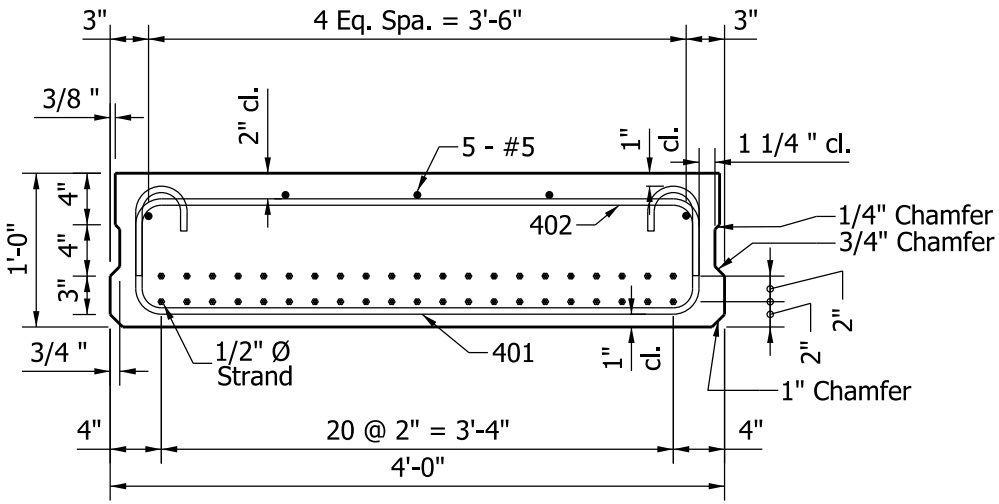

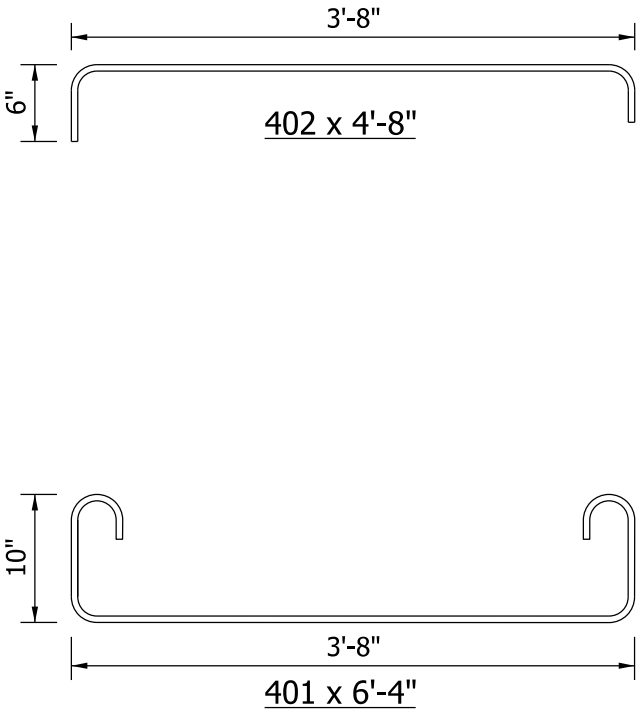

BOX BEAM
TYPE WS 12 x 48

Figure 63-15M