BEAM PROPERTIES
A_B = 647 in^2
I_B = 33,881 in^4
S_{TB} = 3,202 in^3
S_{BB} = 3,252 in^3
Y_{TB} = 10.58 in
Y_{BB} = 10.42 in
Wt. = 674 lbs/ft

NOTES:
1. ▩ *DENOTES EPOXY-COATED BAR

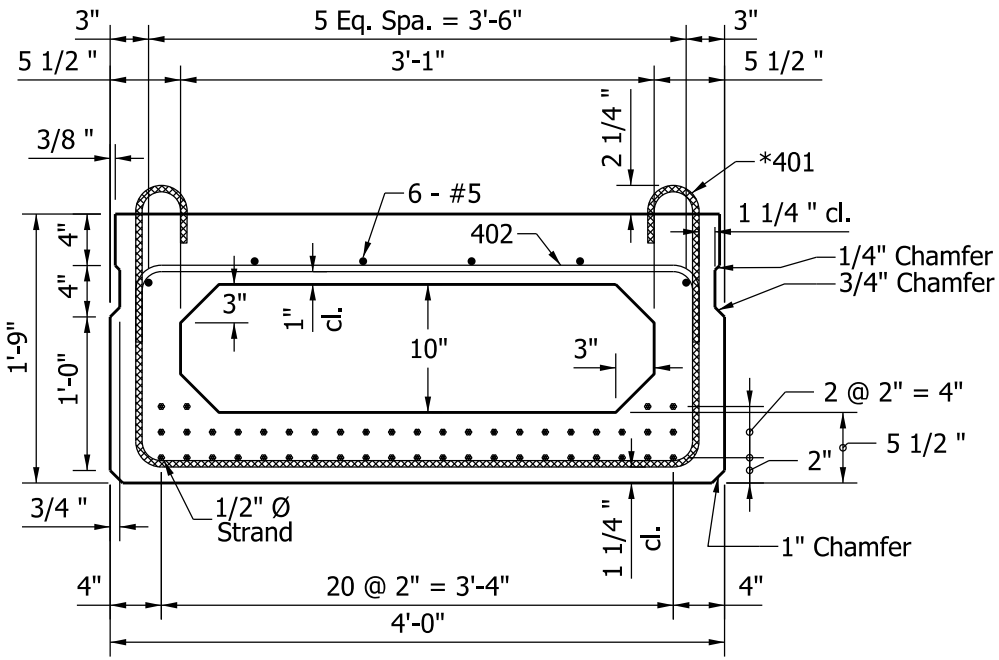

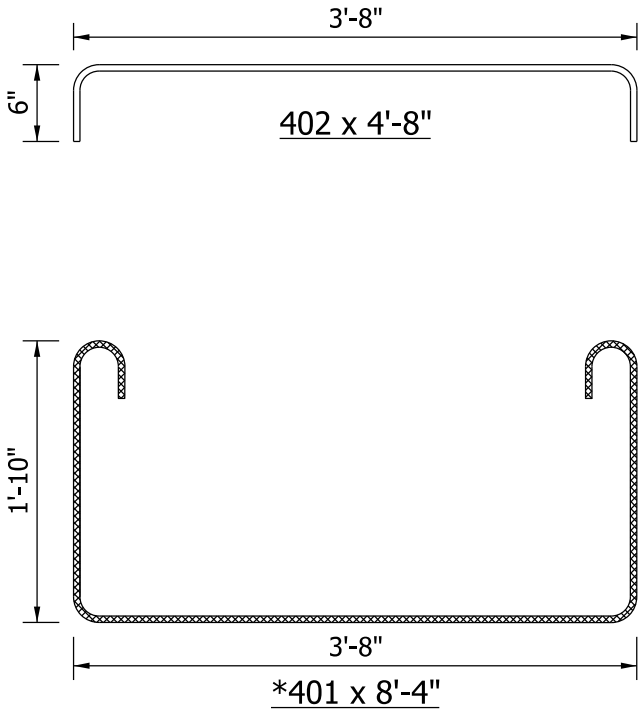

BOX BEAM
TYPE CB 21 x 48

Figure 63-15 I