BEAM PROPERTIES
A_B = 746 in^2
I_B = 161,496 in^4
S_{TB} = 7,618 in^3
S_{BB} = 7,764 in^3
Y_{TB} = 21.20 in
Y_{BB} = 20.80 in
Wt. = 777 lbs/ft

NOTES:
1. ▩ *DENOTES EPOXY-COATED BAR

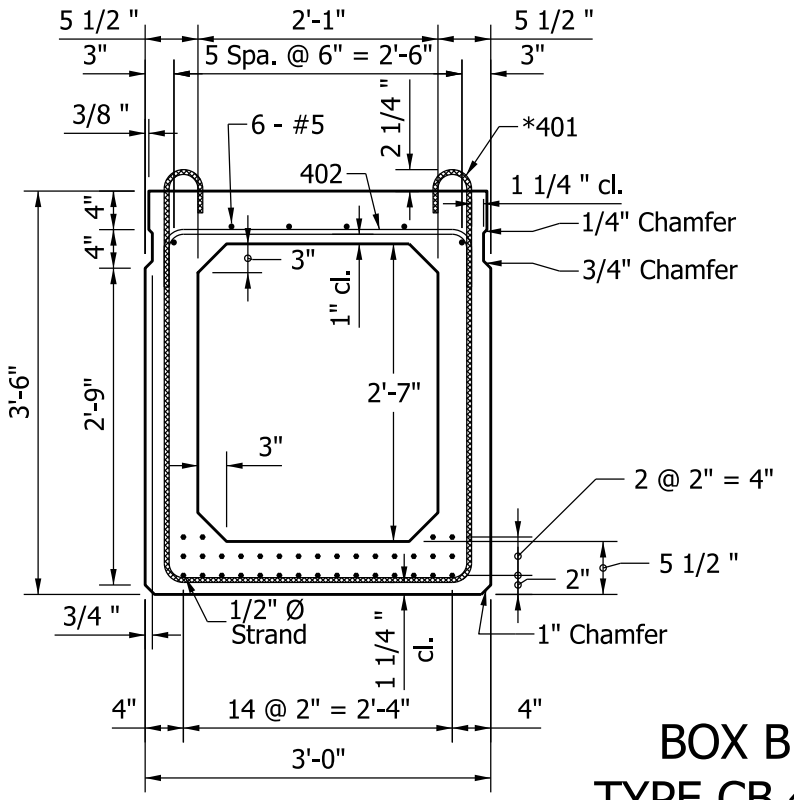

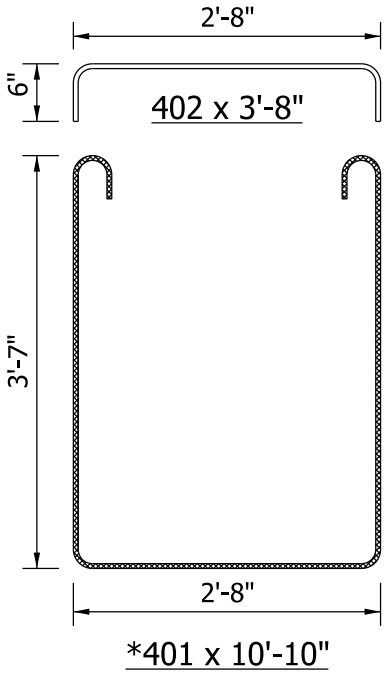

BOX BEAM
TYPE CB 42 x 36

Figure 63-15F