BEAM PROPERTIES
A_B = 515 in^2
I_B = 27,619 in^4
S_{TB} = 2,417 in^3
S_{BB} = 2,463 in^3
Y_{TB} = 10.60 in
Y_{BB} = 10.40 in
Wt. = 536 lbs/ft

NOTES:
1. ▩ *DENOTES EPOXY-COATED BAR

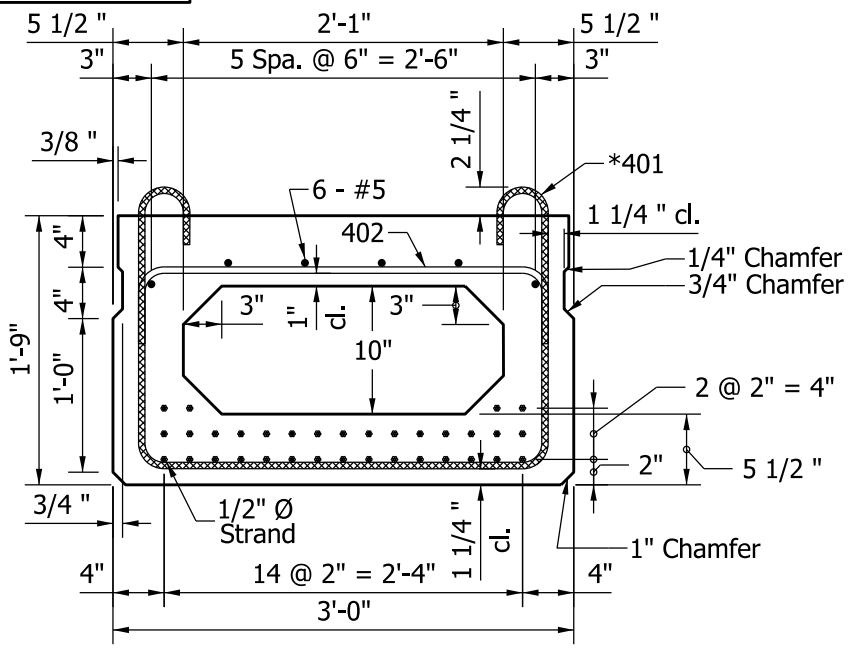

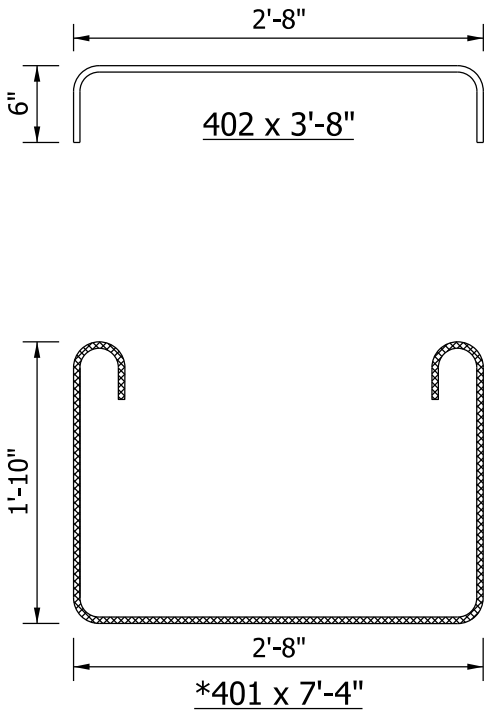

BOX BEAM
TYPE CB 21 x 36

Figure 63-15C