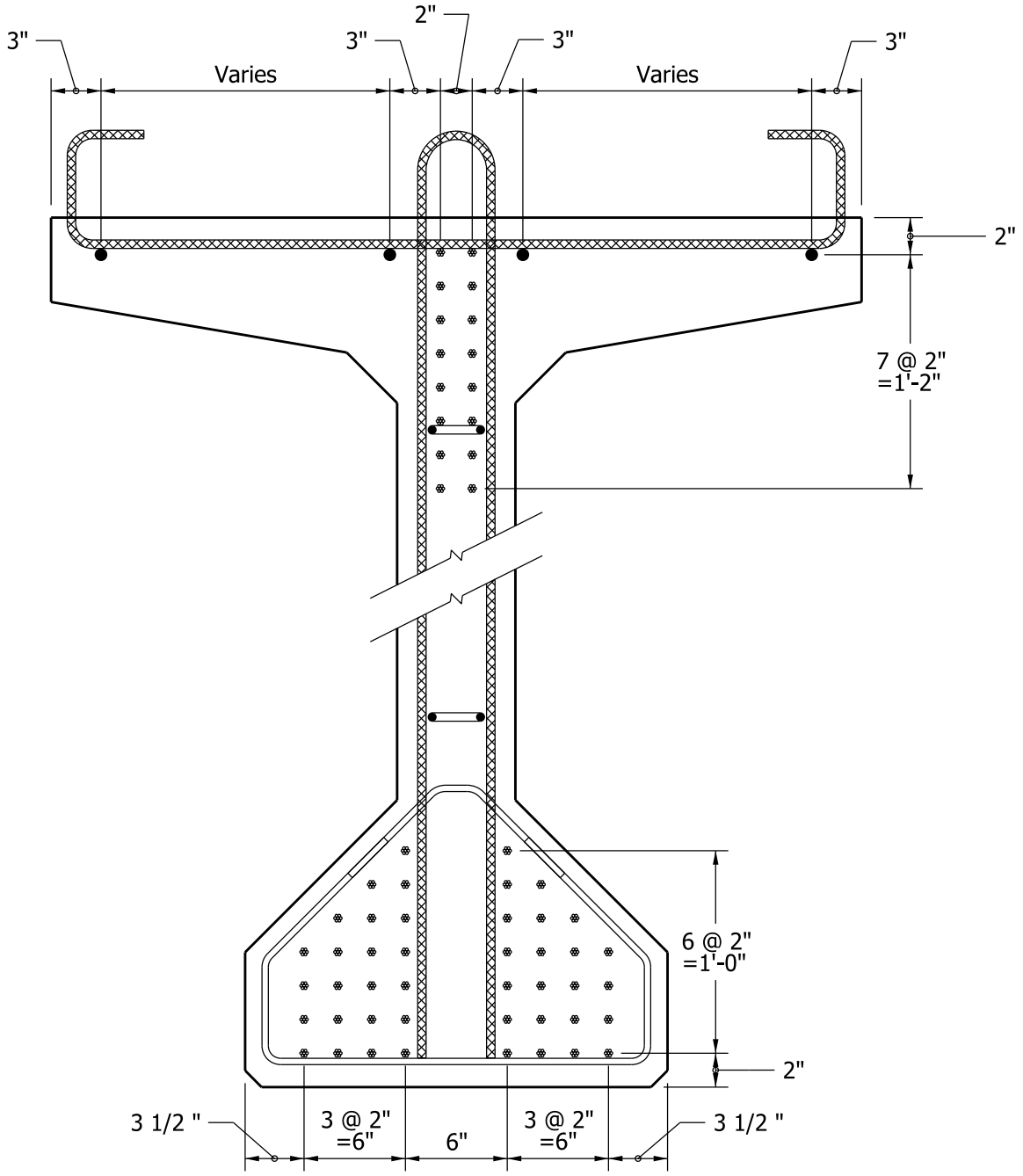

BULB - TEE BEAM
SECTION AT END SHOWING DRAPED STRANDS

Figure 63-14Z