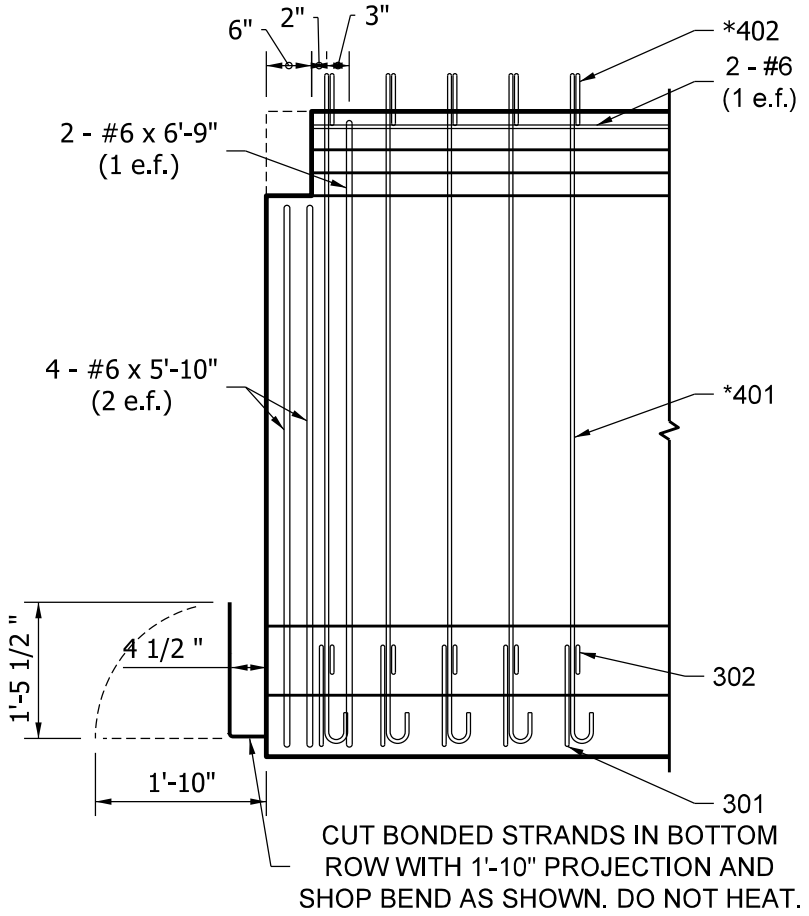

END BENT

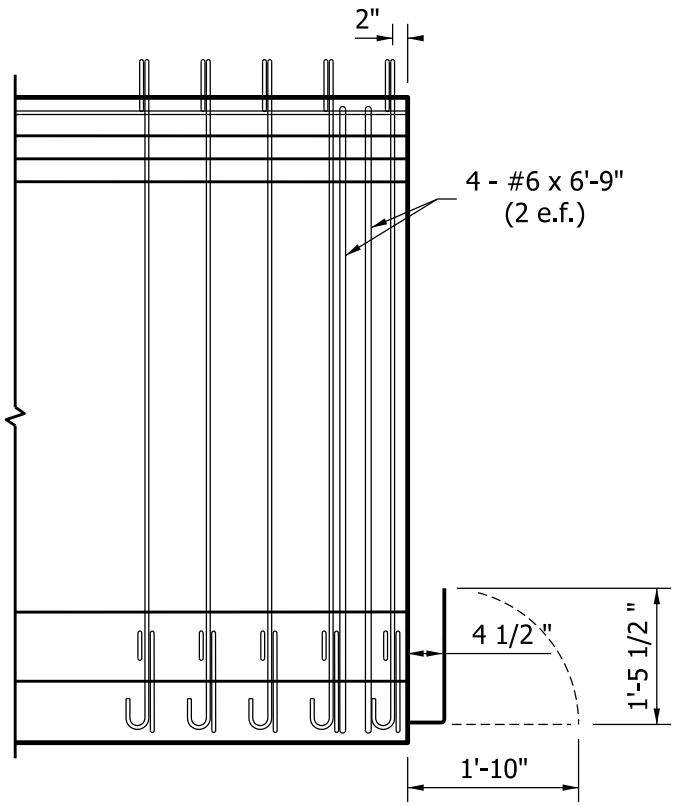

INTERIOR BENT
OR PIER

NOTES:
1. THE 1303 BARS REQUIRED IN SOME SECTIONS ARE NOT SHOWN.
2. * DENOTES EPOXY-COATED BARS

BULB - TEE BEAM (84 DEPTH)
ELEVATIONS SHOWING END REINFORCEMENT

Figure 63-14Y(9)