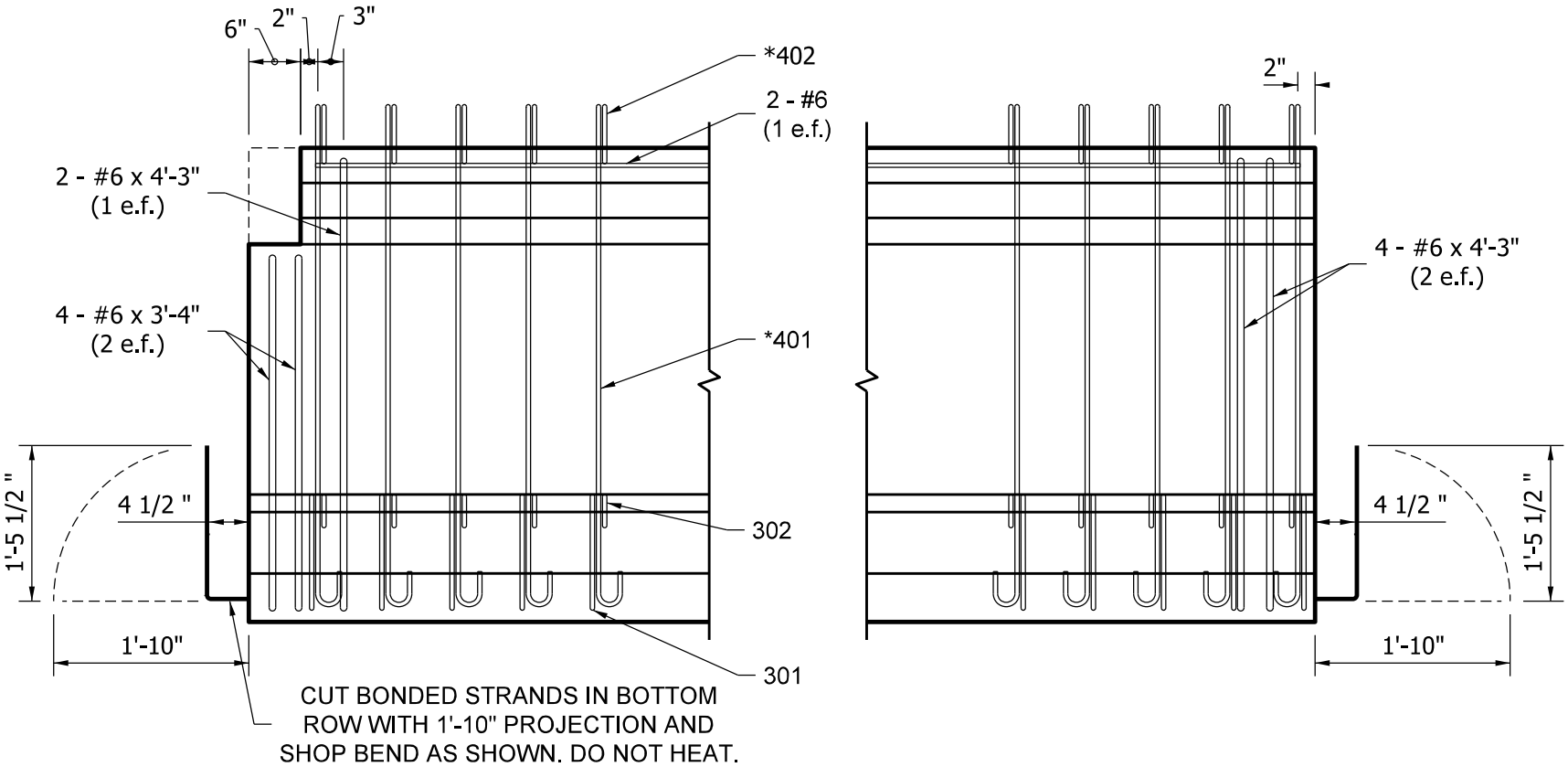


NOTES:
1. THE 1303 BARS REQUIRED IN SOME SECTIONS ARE NOT SHOWN.
2. * DENOTES EPOXY-COATED BARS

# BULB - TEE BEAM (54 DEPTH)
# ELEVATIONS SHOWING END REINFORCEMENT

Figure 63-14Y(4)