* DENOTES EPOXY-COATED BARS

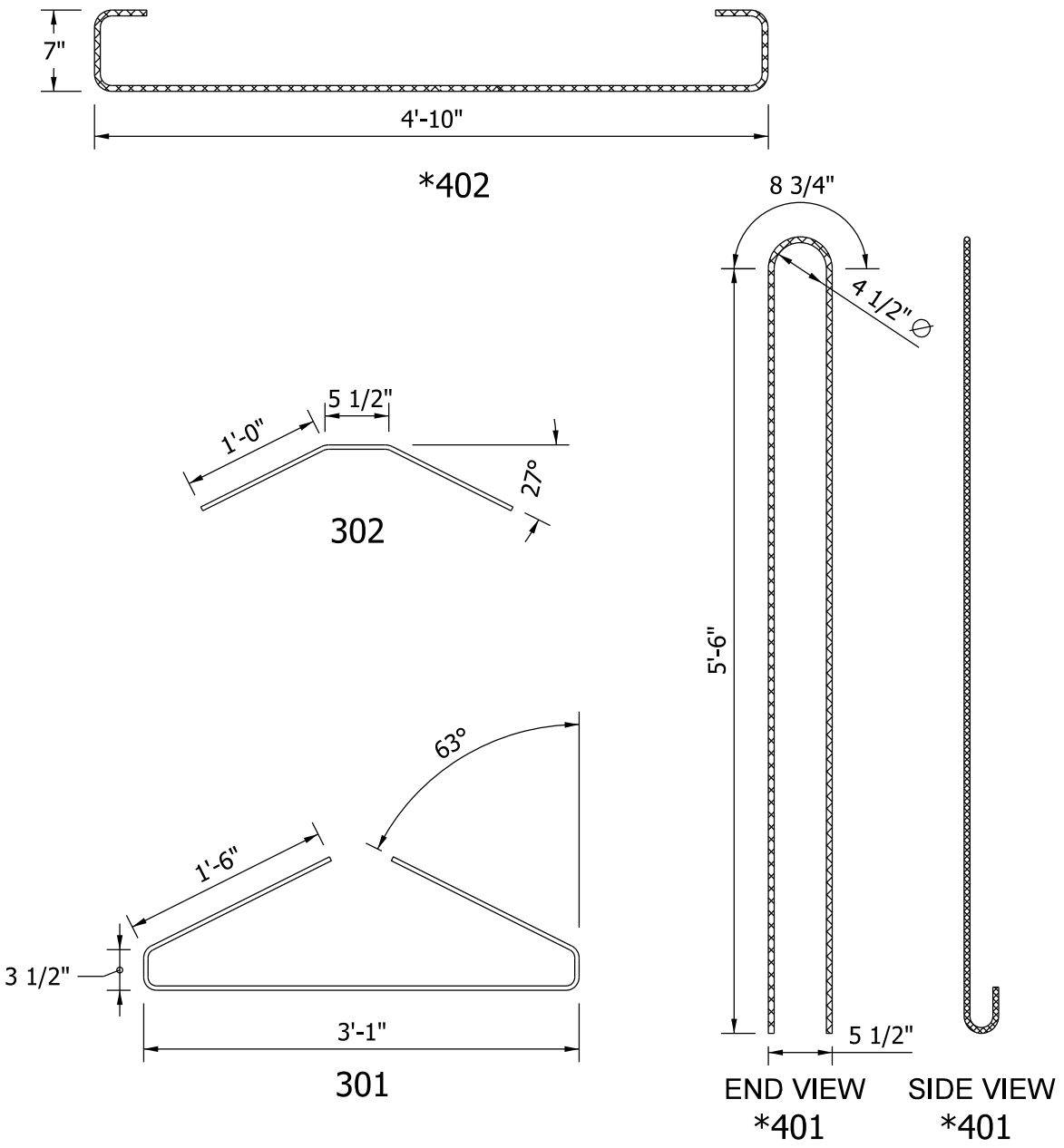

BULB - TEE BEAM
TYPE BT 66 x 61
BAR BENDING DETAILS

Figure 63-14X(2)