* DENOTES EPOXY-COATED BARS

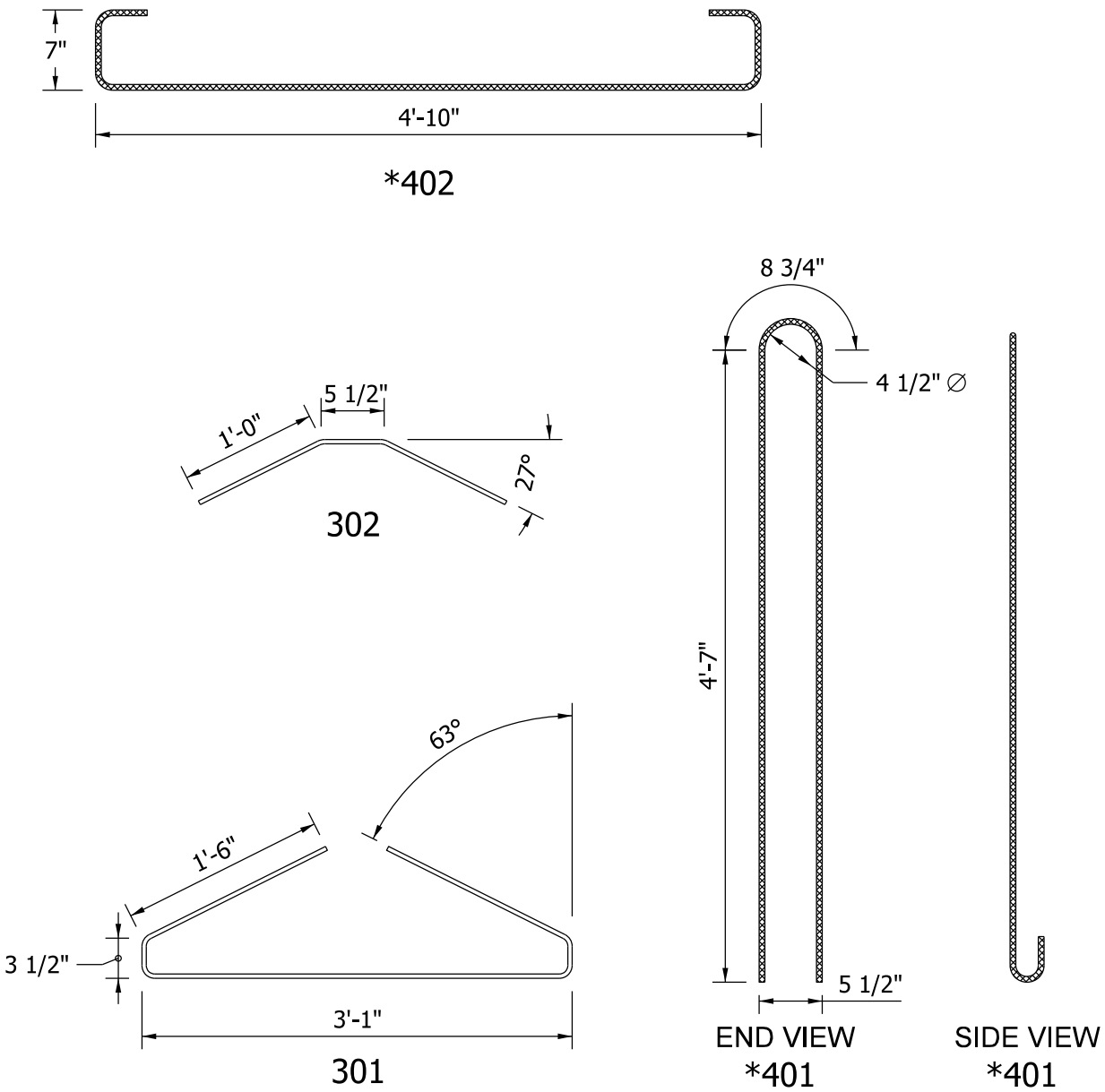

BULB - TEE BEAM
TYPE BT 54 x 61
BAR BENDING DETAILS

Figure 63-14V(2)