* DENOTES EPOXY-COATED BARS

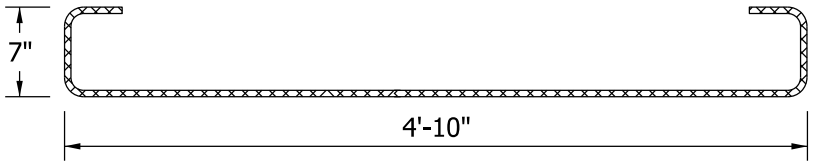

*402

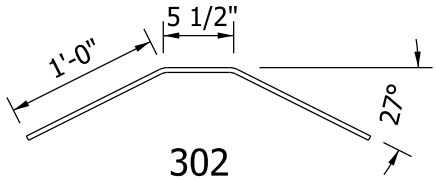

302

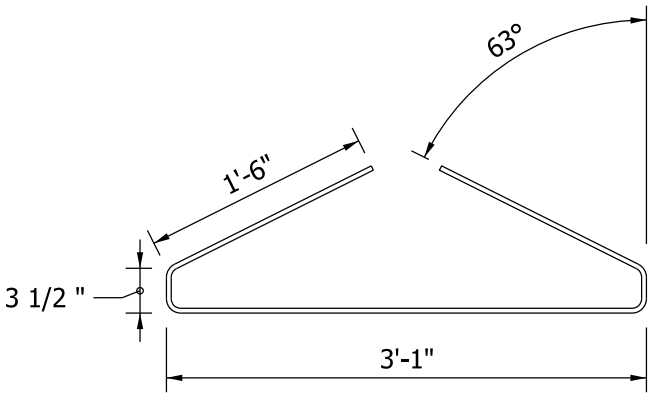

301

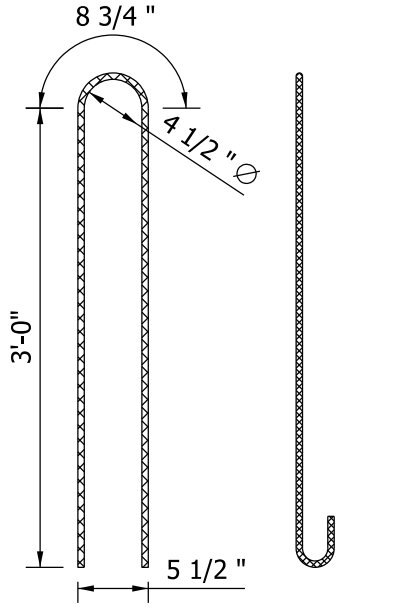

END VIEW *401

SIDE VIEW *401

BULB - TEE BEAM
TYPE BT 36 x 61
BAR BENDING DETAILS

Figure 63-14S(2)