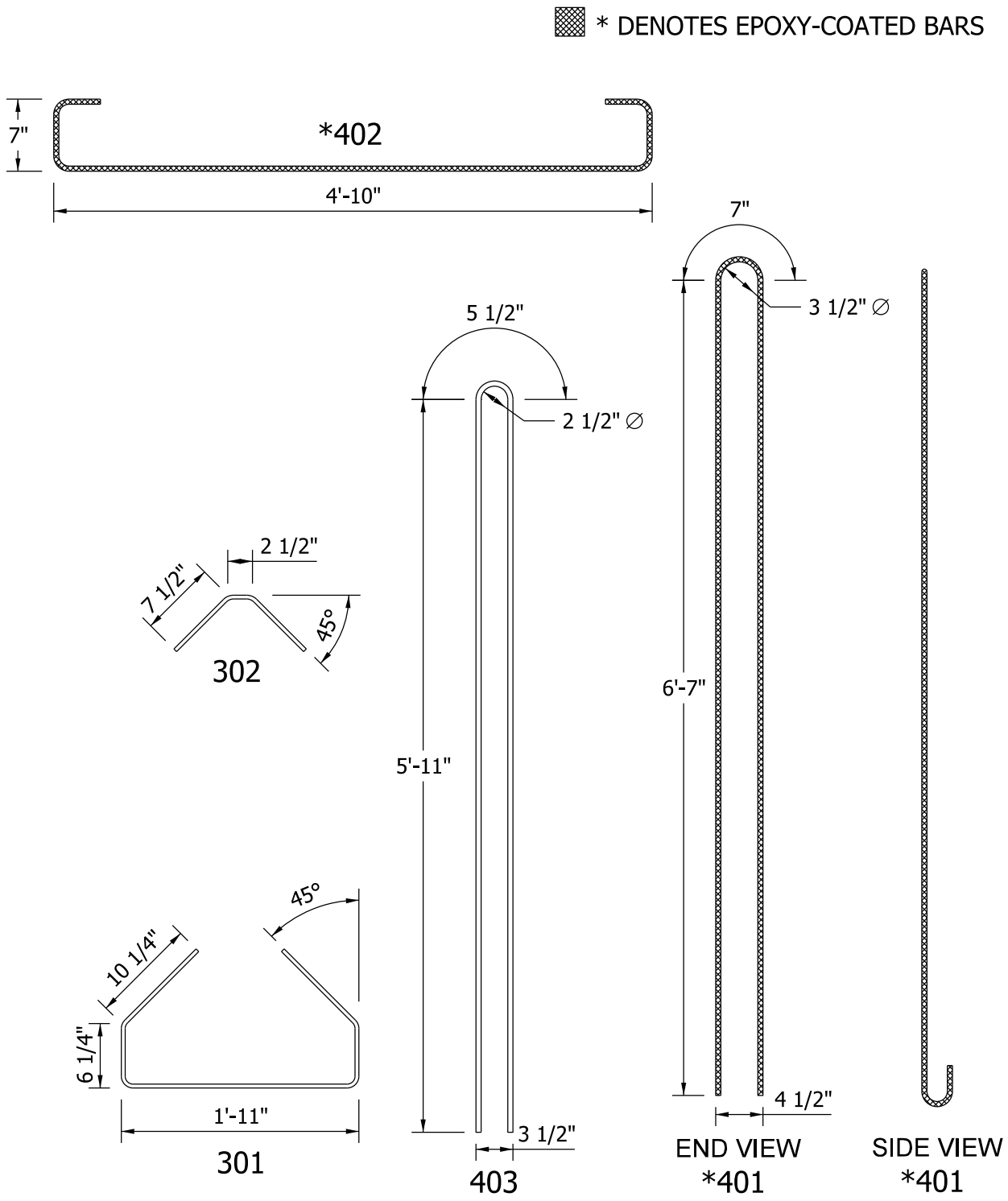

BULB - TEE BEAM
TYPE BT 78 x 60
BAR BENDING DETAILS

Figure 63-14Q(2)