BEAM PROPERTIES

A_B = 1018 in^2
I_B = 608,591 in^4
S_{TB} = 20,859 in^3
S_{BB} = 16,527 in^3
Y_{TB} = 29.2 in
Y_{BB} = 36.8 in
Wt. = 1060 lb/lf

NOTES:
1. BARS 301 AND 302 COMBINED TO FORM ONE STIRRUP.
2. ▩*DENOTES EPOXY-COATED BARS

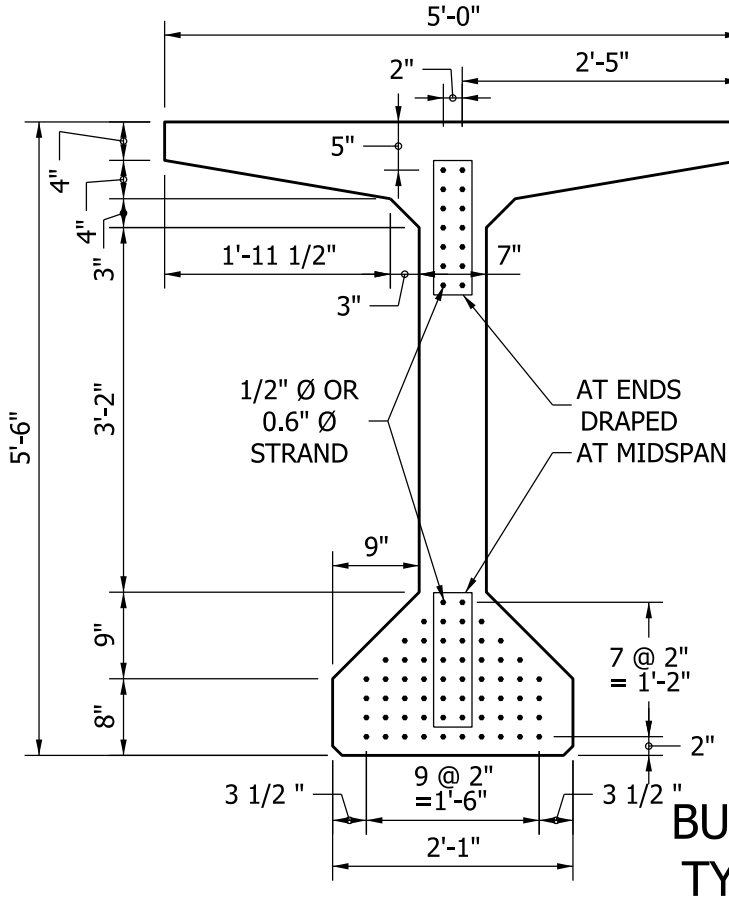

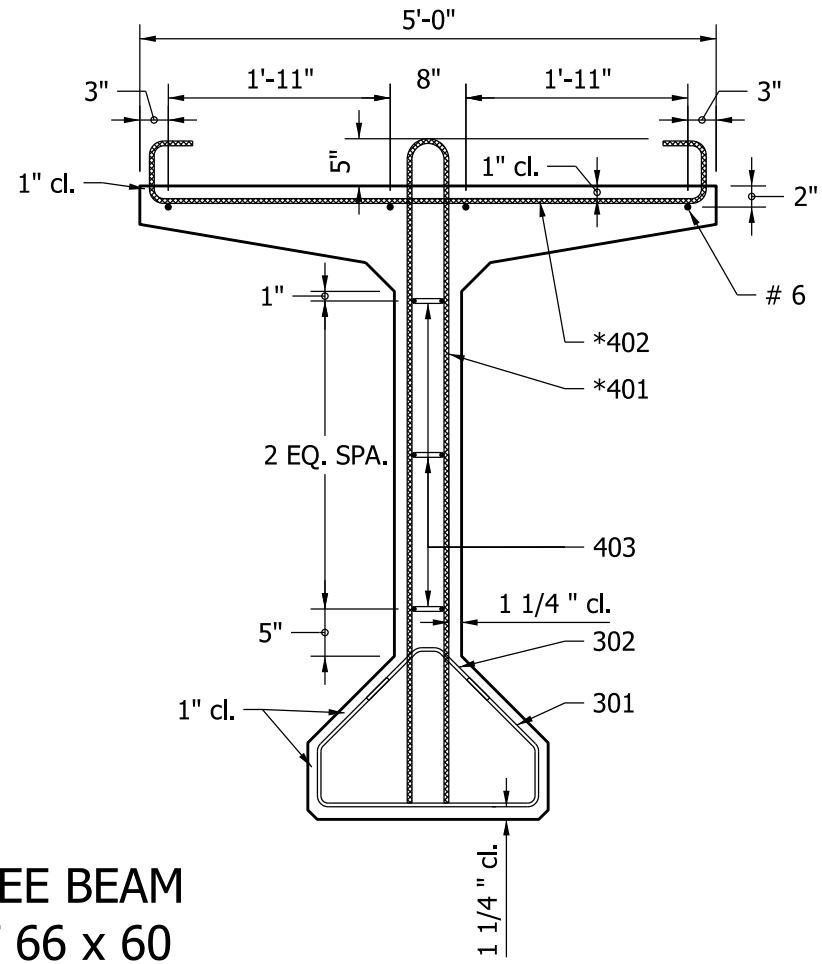

BULB - TEE BEAM
TYPE BT 66 x 60

Figure 63-14 O(1)