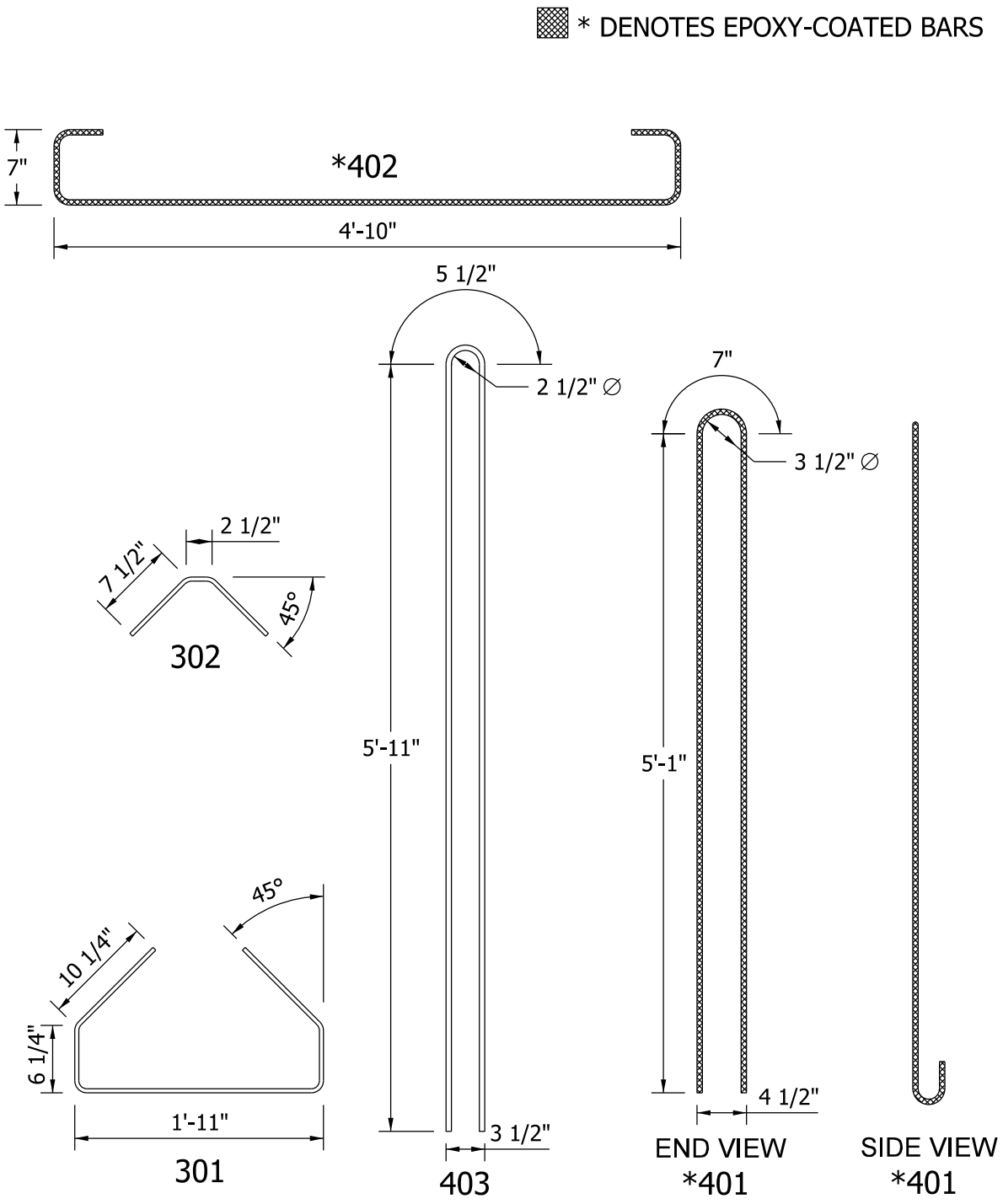

BULB - TEE BEAM
TYPE BT 60 x 60
BAR BENDING DETAILS

Figure 63-14N(2)