* DENOTES EPOXY-COATED BARS

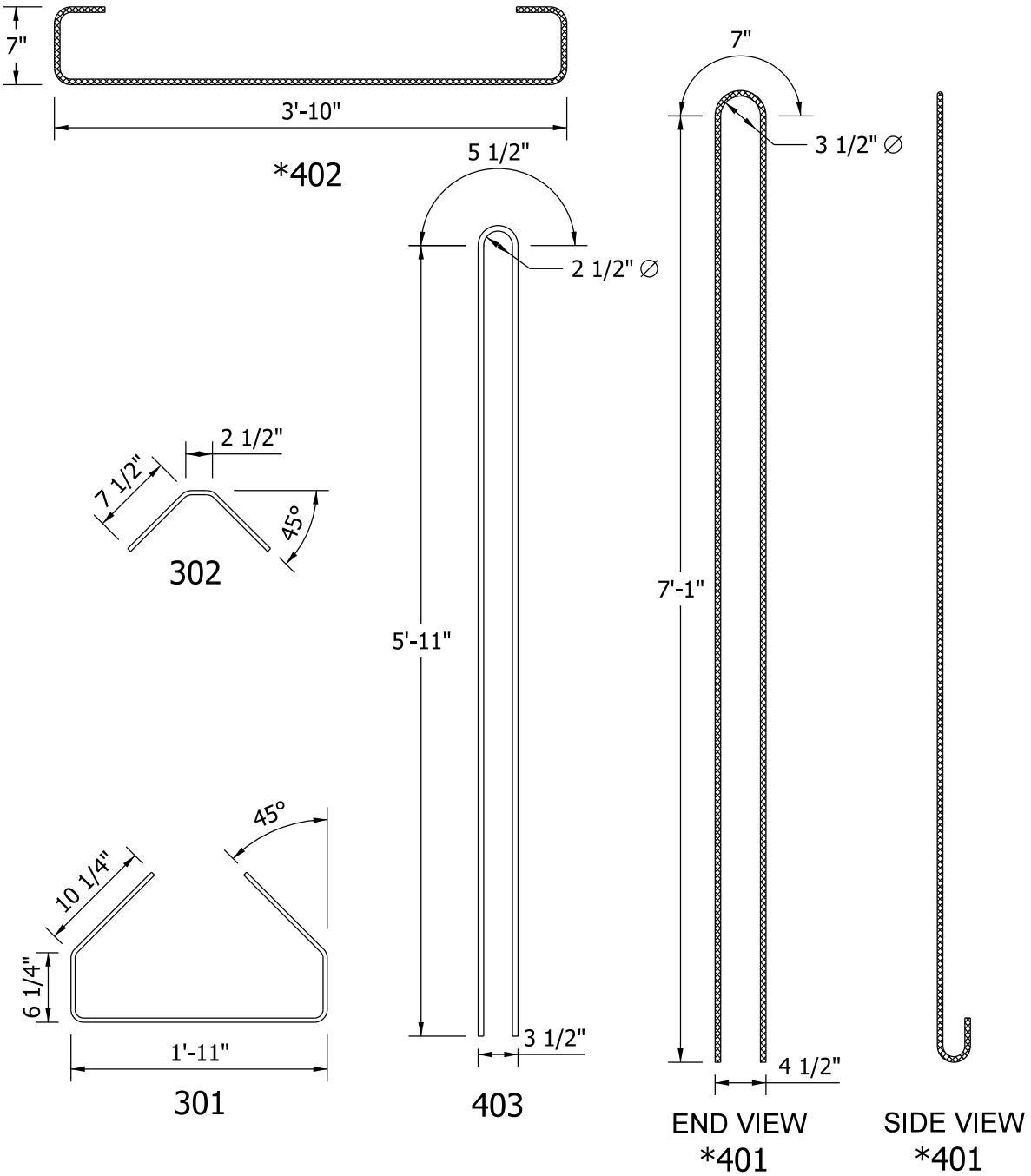

BULB - TEE BEAM
TYPE BT 84 x 48
BAR BENDING DETAILS

Figure 63-14F(2)