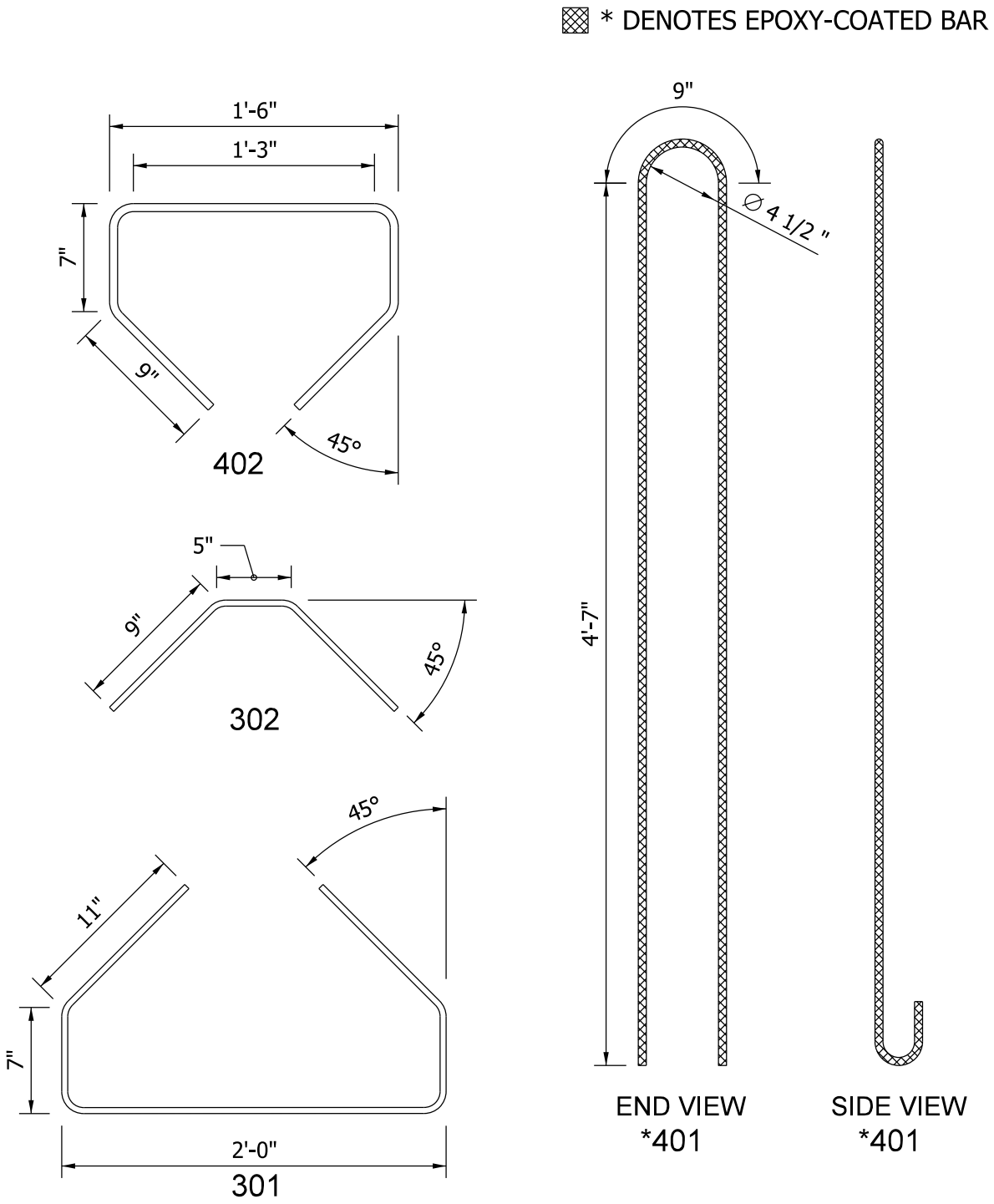

I - BEAM TYPE IV
BAR BENDING DETAILS

Figure 63-13D(2)