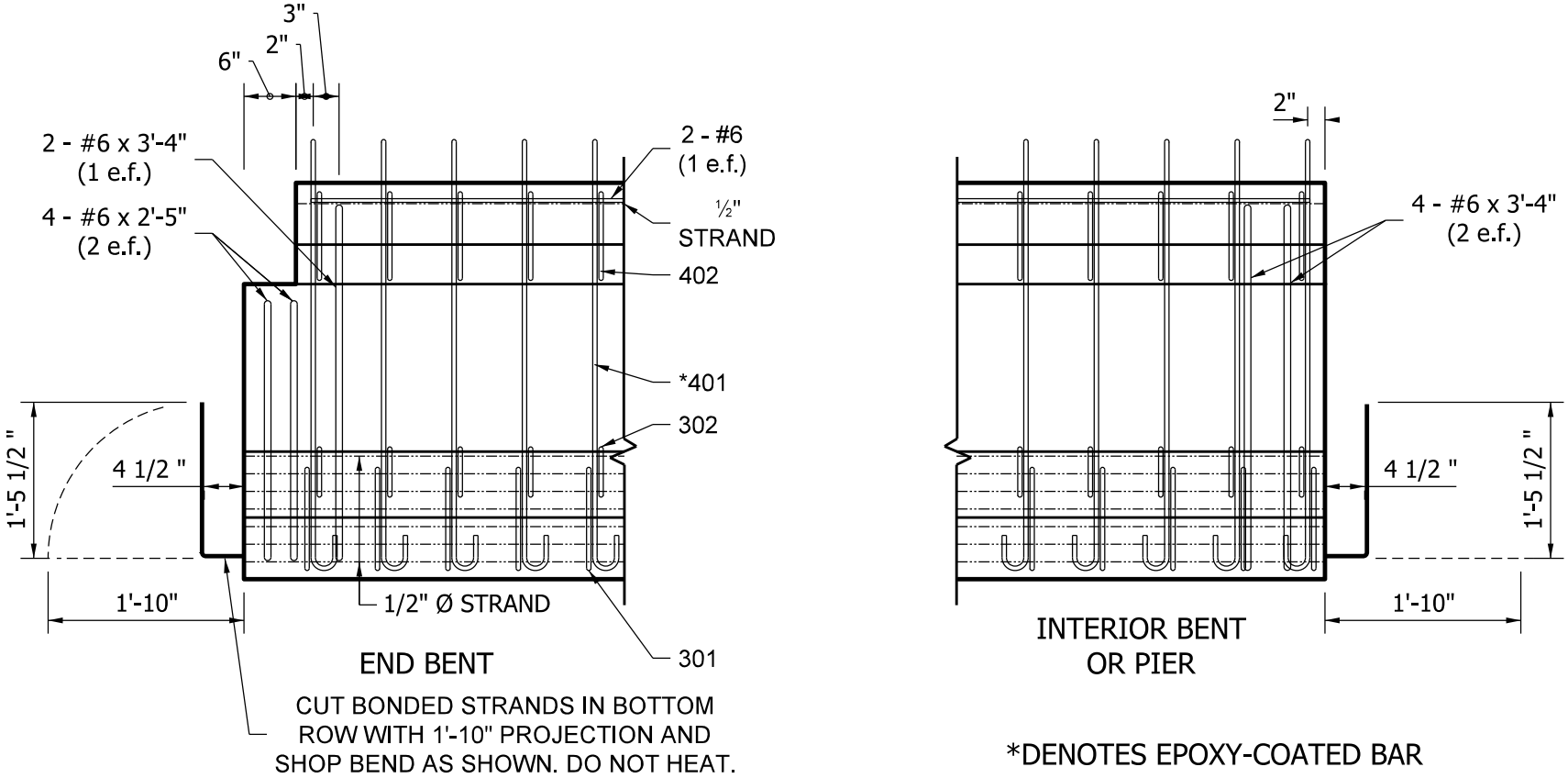

I - BEAM TYPE III
ELEVATIONS SHOWING END REINFORCEMENT

Figure 63-13C(3)