BEAM PROPERTIES

A_B = 560 in.^{2}
I_B = 125,390 in.^{4}
S_{TB} = 5,071 in.^{3}
S_{BB} = 6,185 in.^{3}
Y_{TB} = 24.7 in.
Y_{BB} = 20.3 in.
Wt. = 583 lb/lf

NOTES:
1. BARS 301 AND 302 COMBINED TO FORM ONE STIRRUP.

2. ▩ *DENOTES EPOXY-COATED BAR

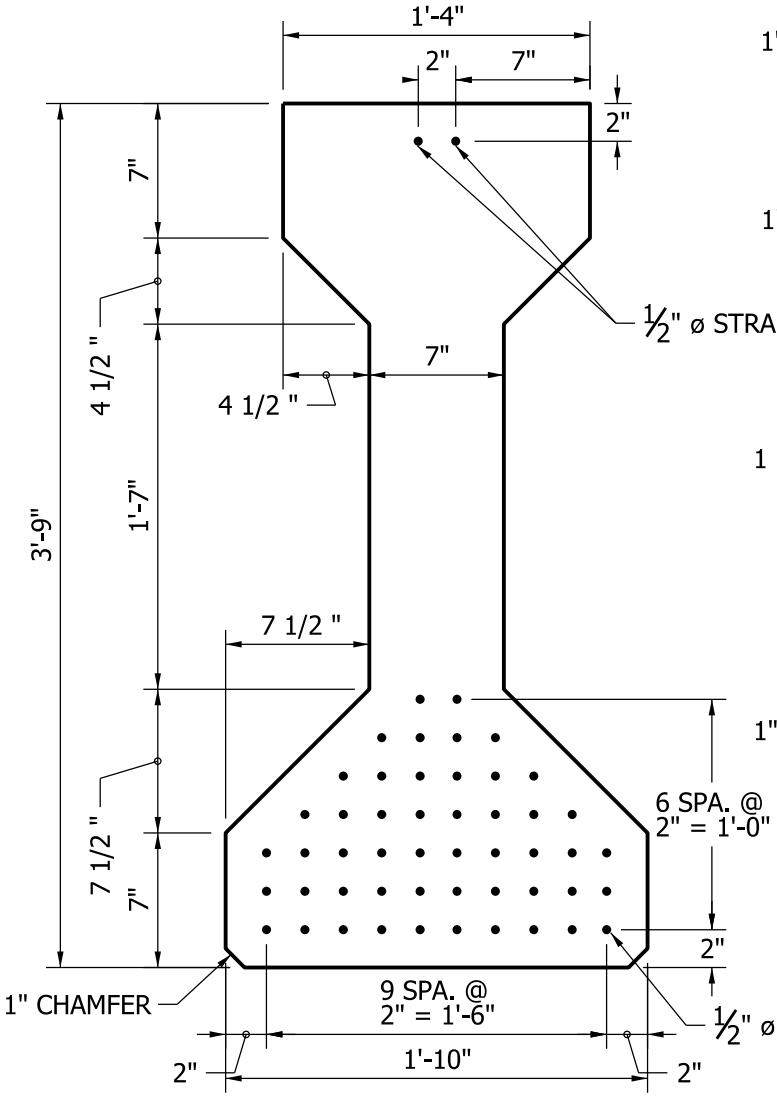

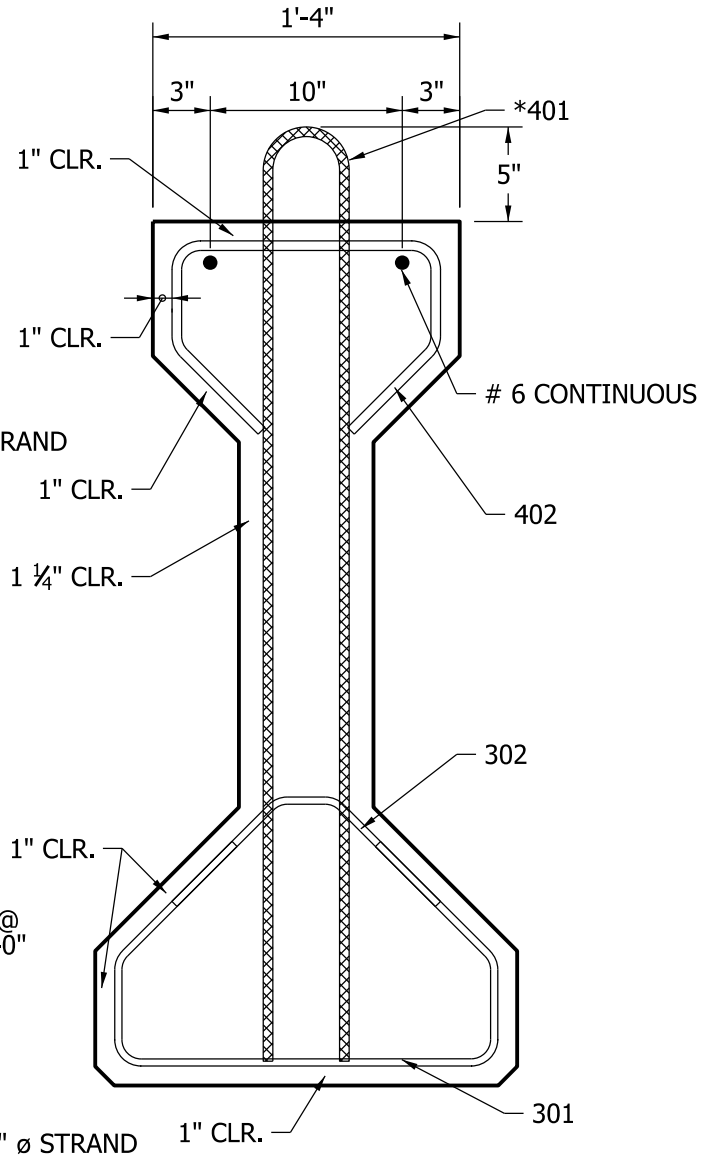

I - BEAM TYPE III

Figure 63-13C(1)