* DENOTES EPOXY-COATED BAR

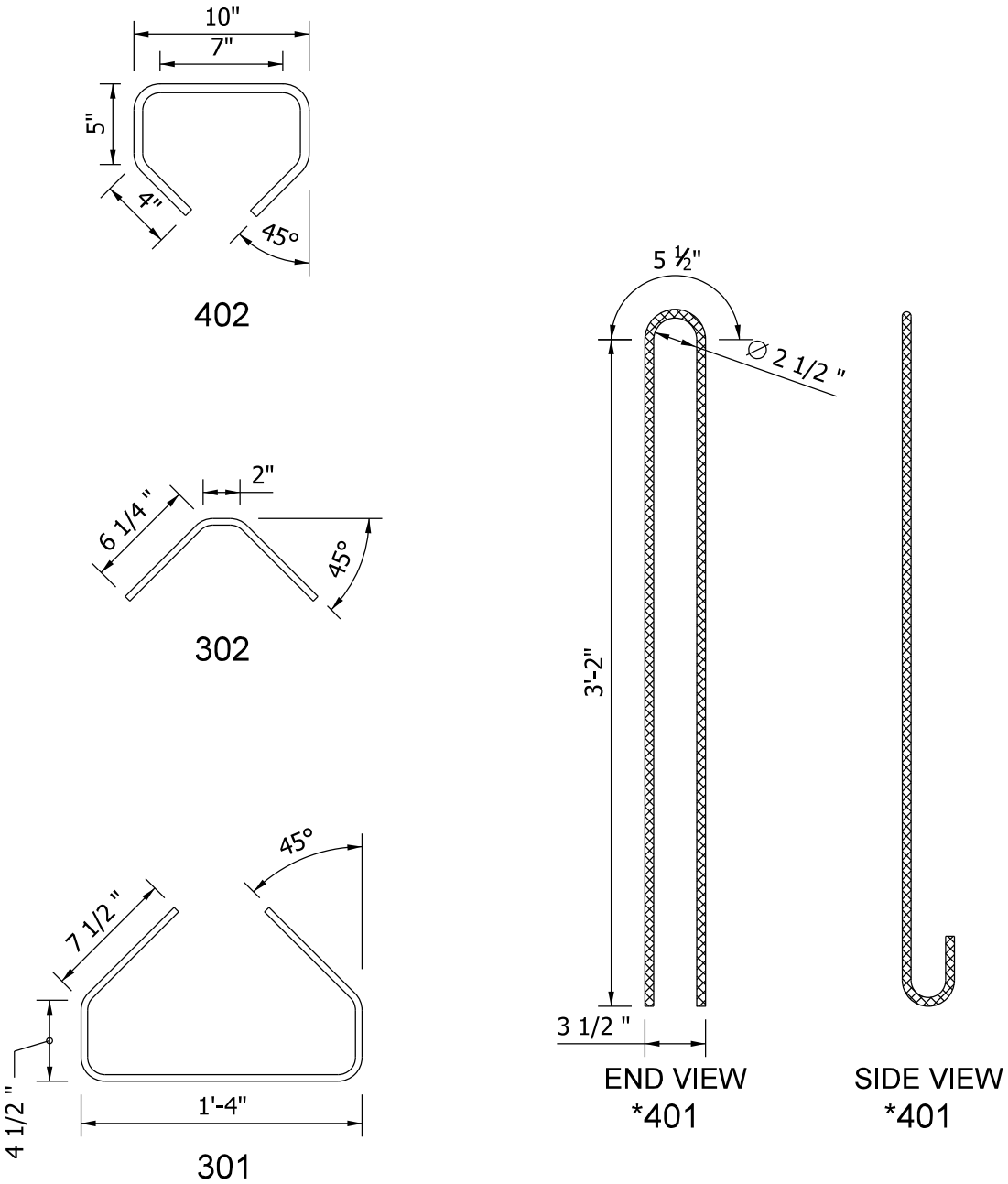

I - BEAM TYPE II
BAR BENDING DETAILS

Figure 63-13B(2)