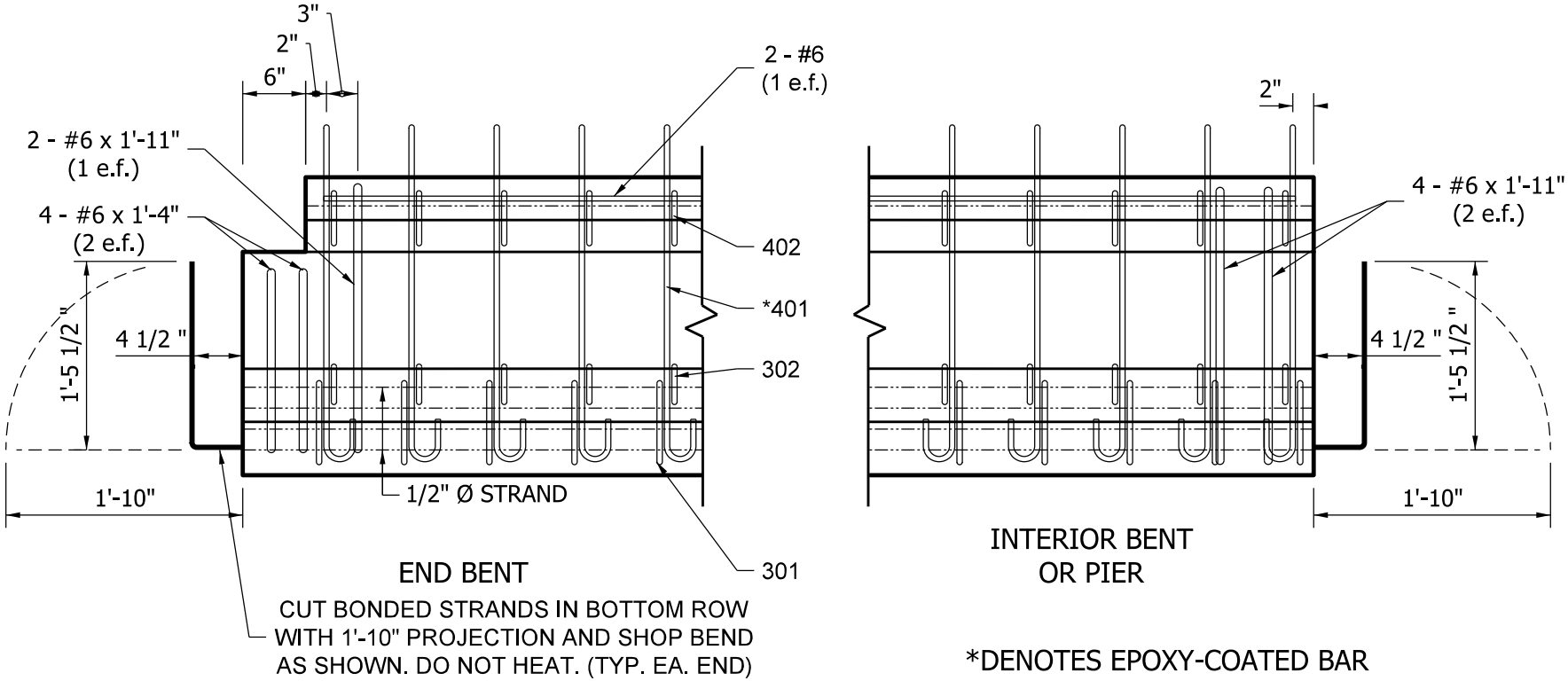

I - BEAM TYPE I
ELEVATIONS SHOWING END REINFORCEMENT

Figure 63-13A(3)