BEAM PROPERTIES

A_B = 276 in.^{2}

I_B = 22,744 in.^{4}

S_{TB} = 1,476 in.^{3}

S_{BB} = 1,807 in.^{3}

Y_{TB} = 15.4 in.

Y_{BB} = 12.6 in.

Wt. = 288 lb/lf

NOTES:

1. BARS 301 AND 302 COMBINED TO FORM ONE STIRRUP.

2. ▩ *DENOTES EPOXY-COATED BAR

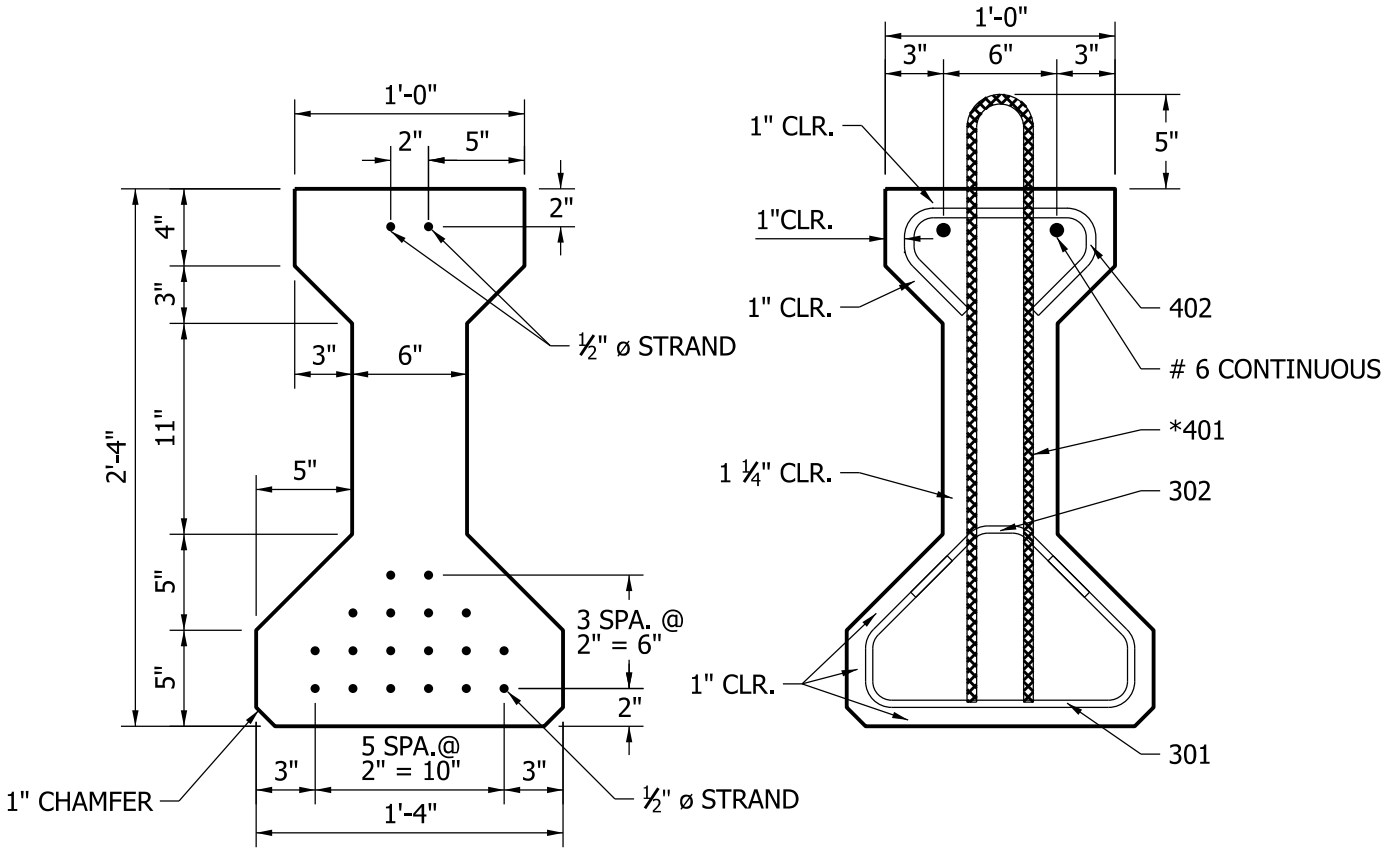

I - BEAM TYPE I

Figure 63-13A(1)