NOTE: ALL REINFORCING STEEL SHALL BE EPOXY COATED.

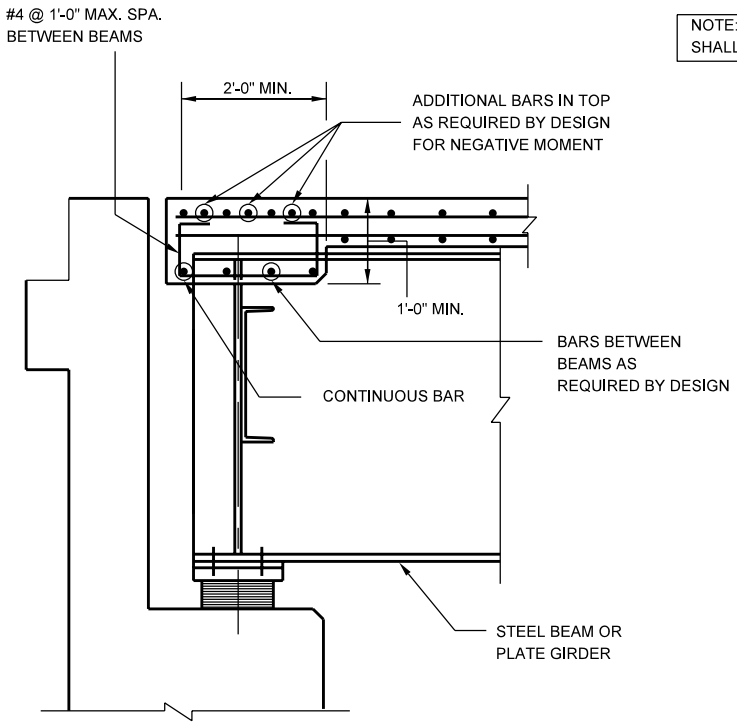


SKEW 25° OR LESS

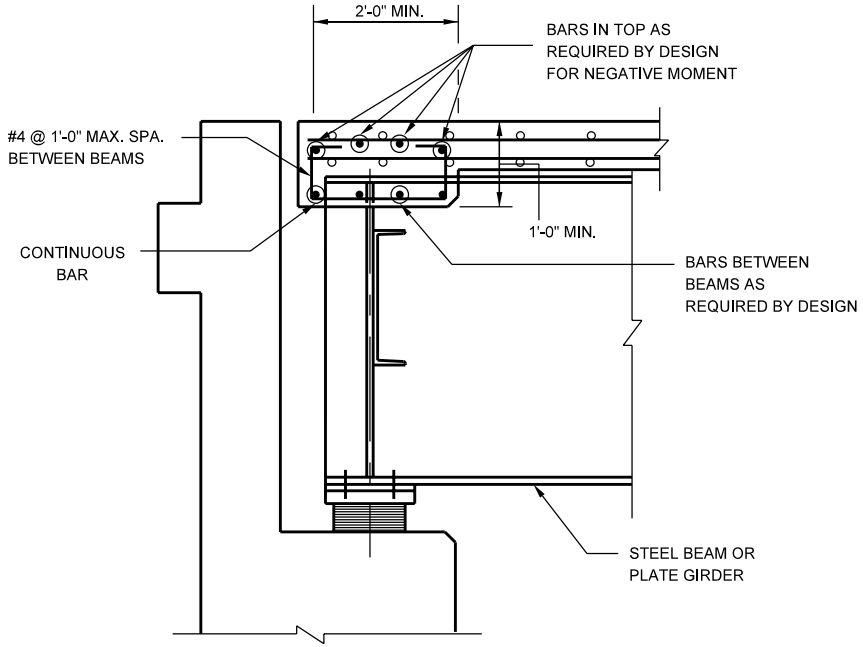


SKEW OVER 25°

SUGGESTED ALTERNATE TRANSVERSE EDGE BEAM DETAILS
(For Steel Plate Girders)

Figure 61-5K