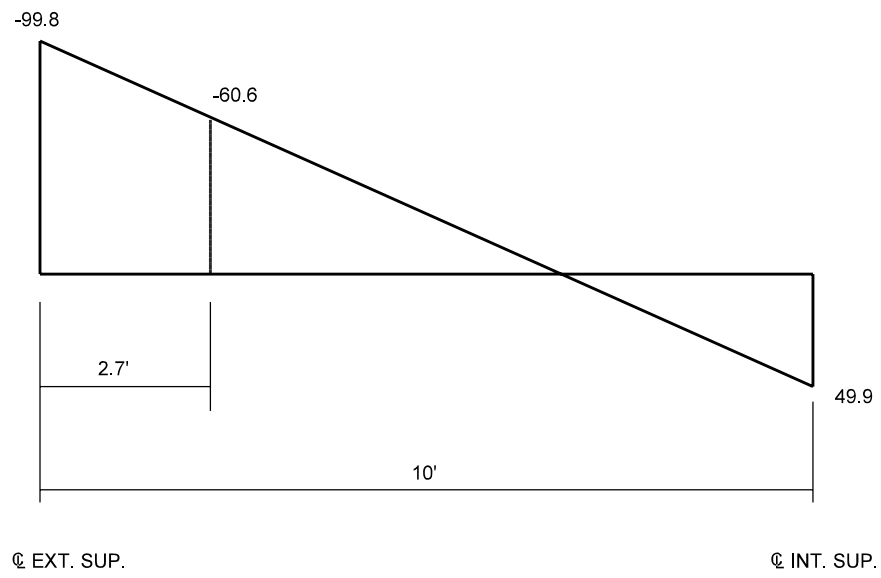

MOMENT DIAGRAM DETERMINING CUT-OFF POINT

Figure 61-5F