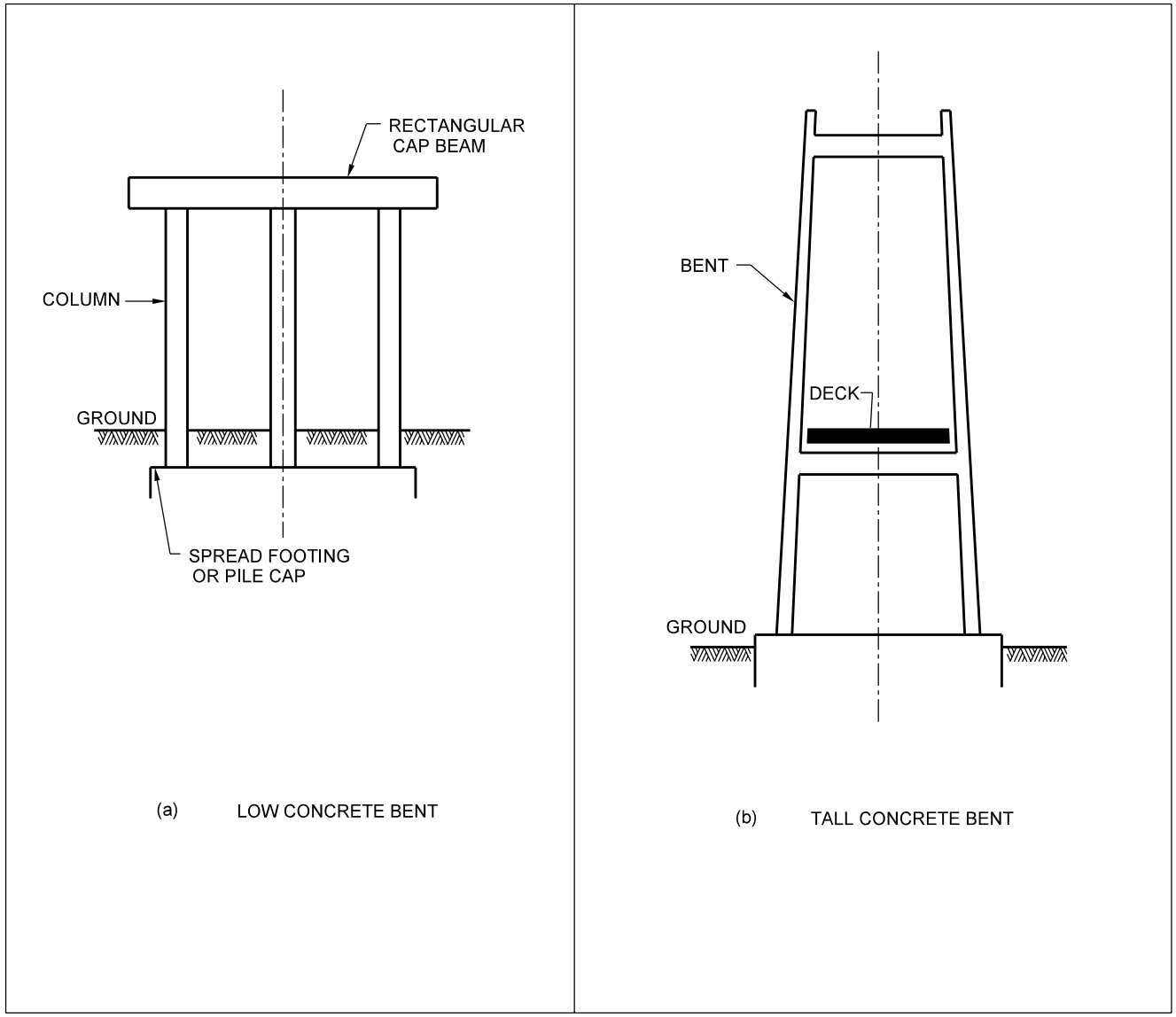

FRAME BENTS

Figure 59-2G