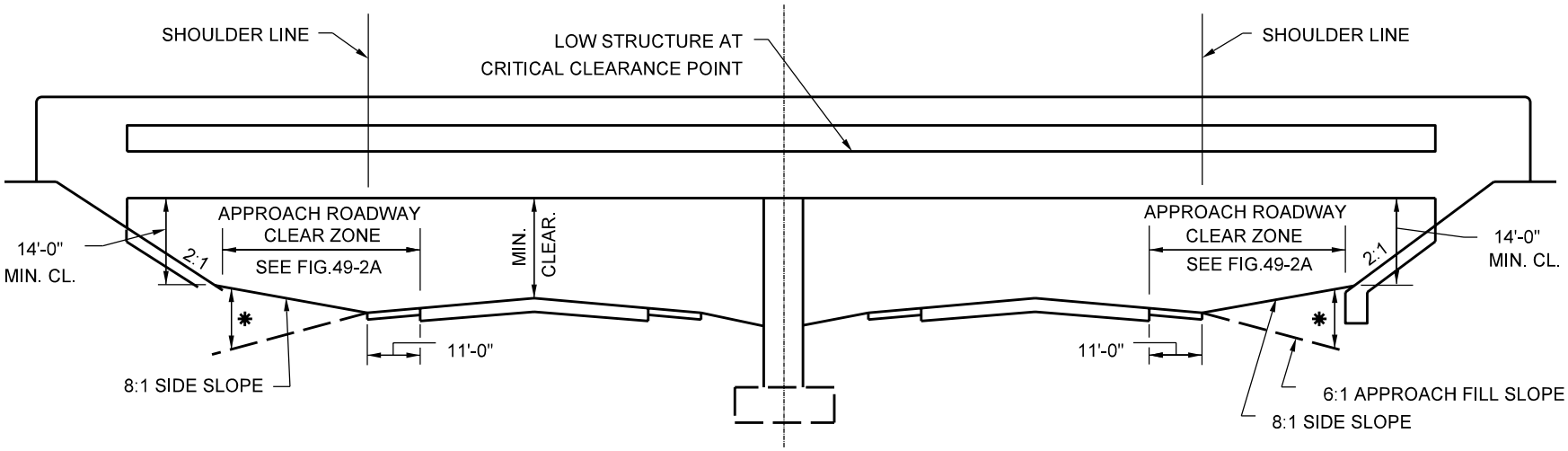

TANGENT SECTION

* SEE SECTION 49-3.05(03) FOR SPILLSLOPE TRANSITIONS.

NOTE: MEDIAN PIER PROTECTION SHOULD BE PROVIDED.

BRIDGE UNDERPASS CROSS SECTION
(New Construction/4R Project)

Figure 59-1L