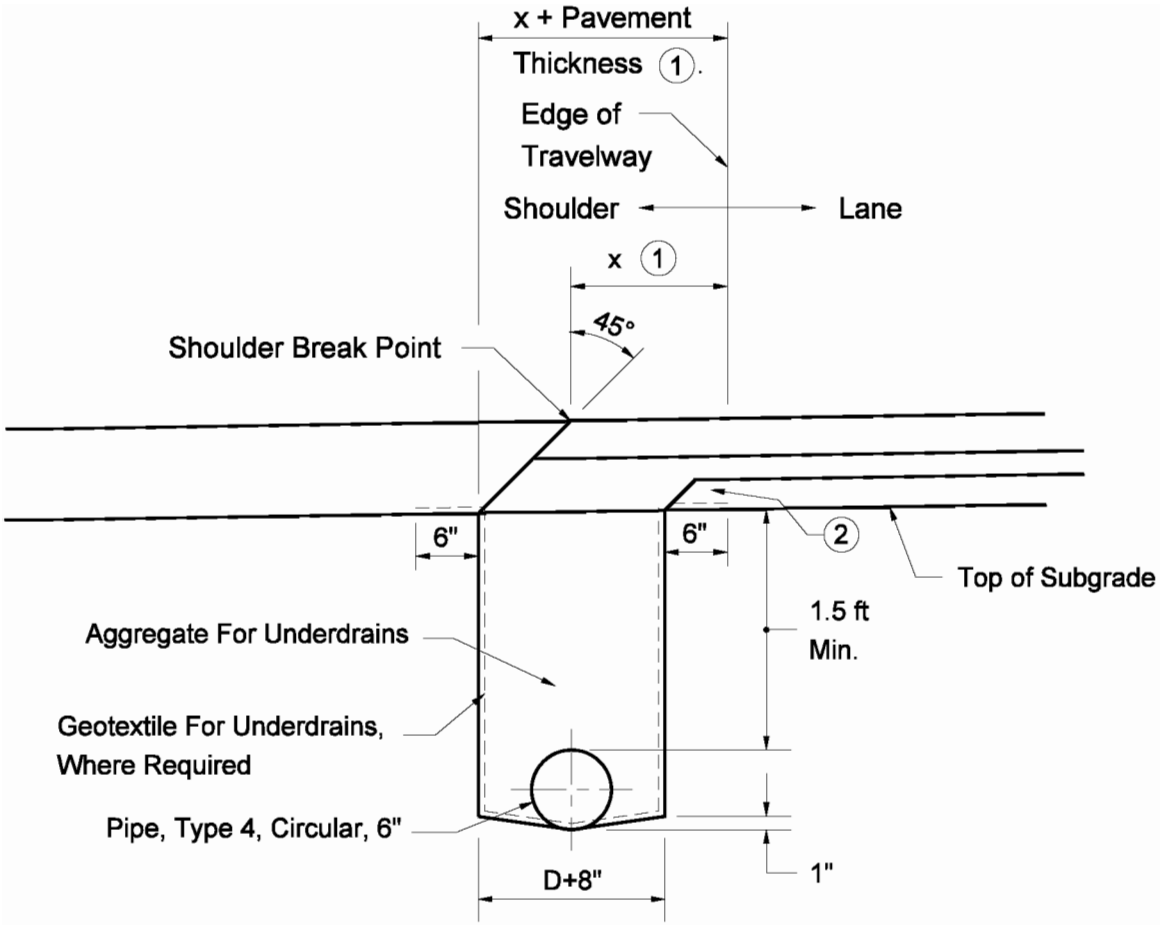

(1) Dimension x is 2 ft min., 4 ft max. See Fig. 45-1A(1).

(2) Where a HMA Base 25.0 mm course is used, the geotextile fabric shall extend under the course.

3. Median Installation shown. Outside Installation Reversed as Applicable.

UNDERDRAIN FOR HMA PAVEMENT
≥ 30 MILLION ESALs

Figure 52-13L