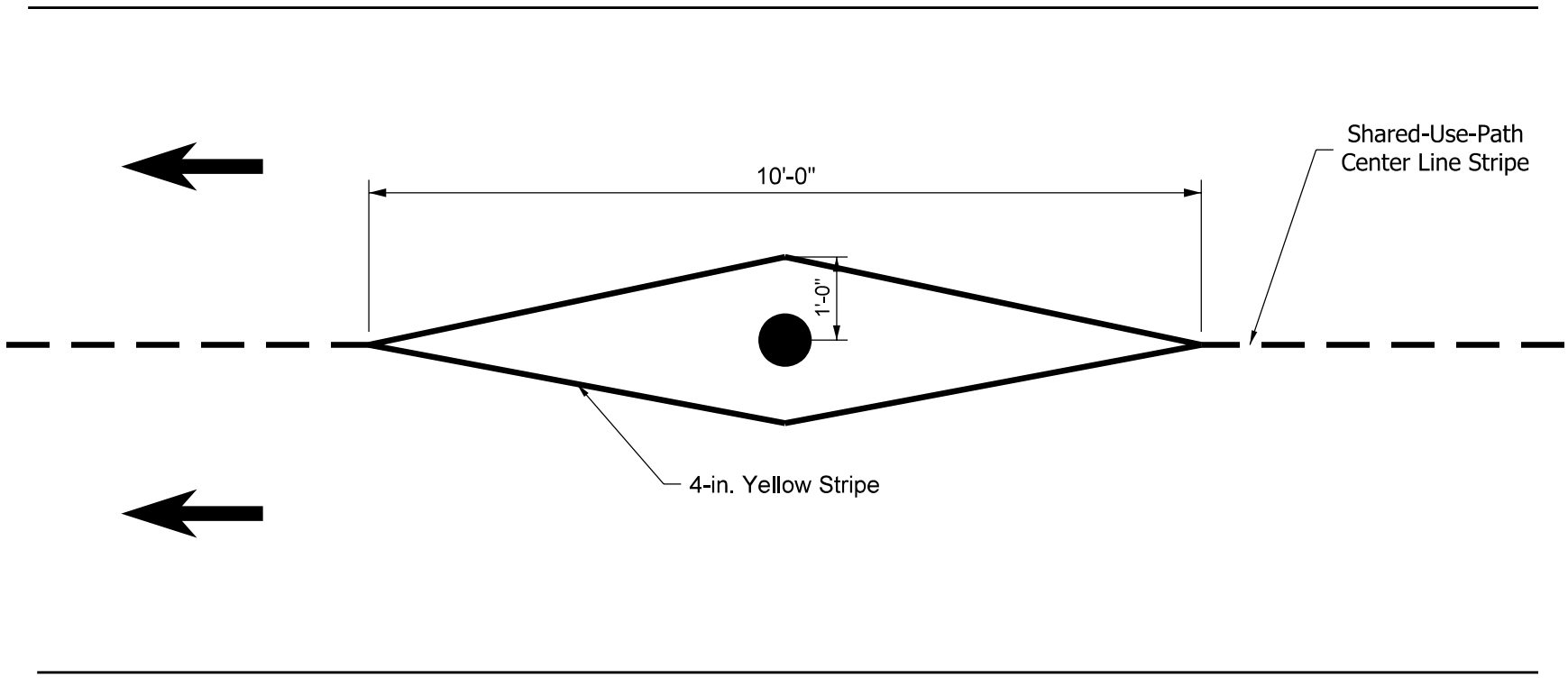

STRIPING AT MOTOR-VEHICLE BARRIER POST

Figure 51-7U