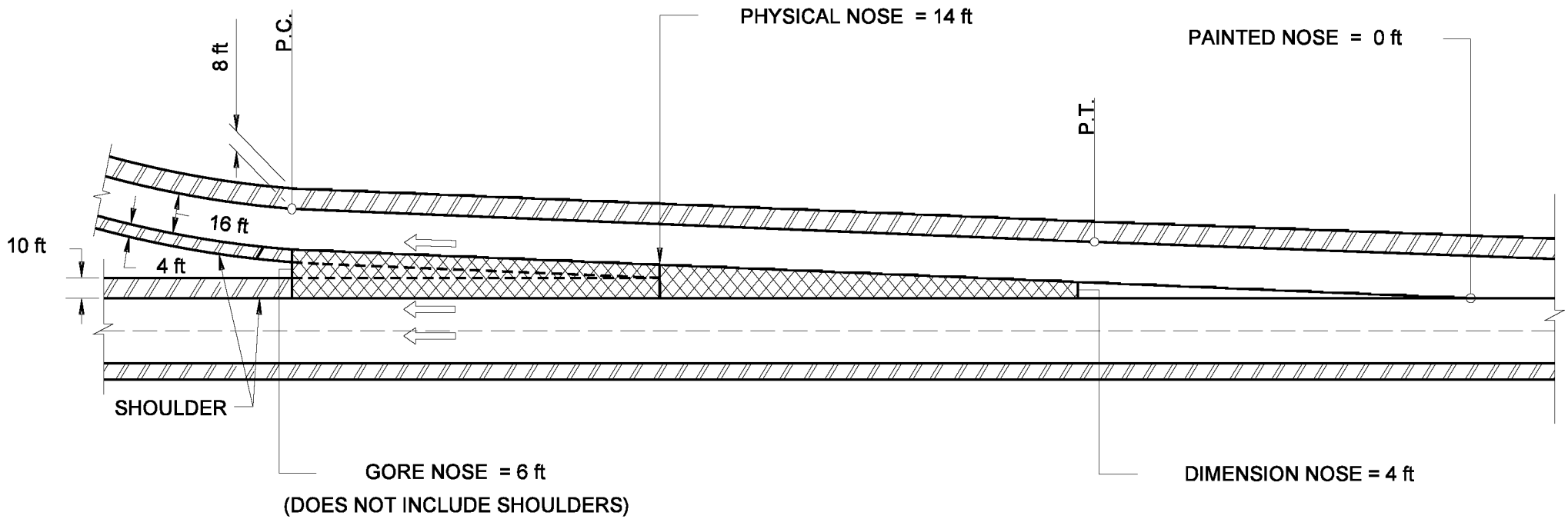

EXIT RAMP GORE AREA

Figure 48-4B