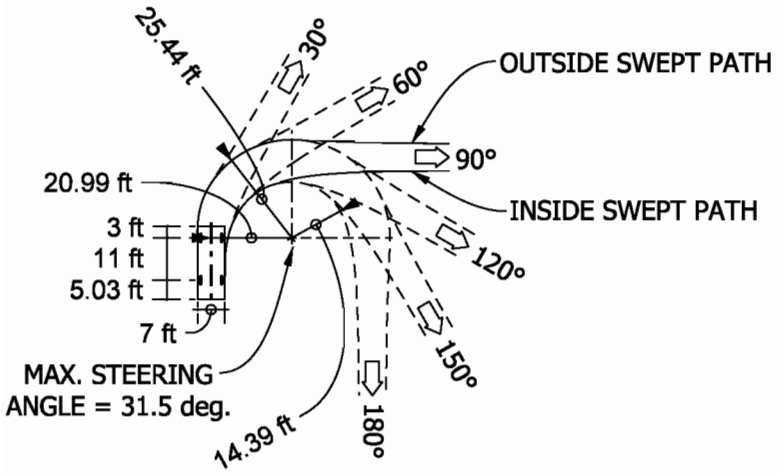

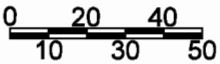

P - DESIGN VEHICLE
(1" = 50' SCALE)

Figure 46-12B