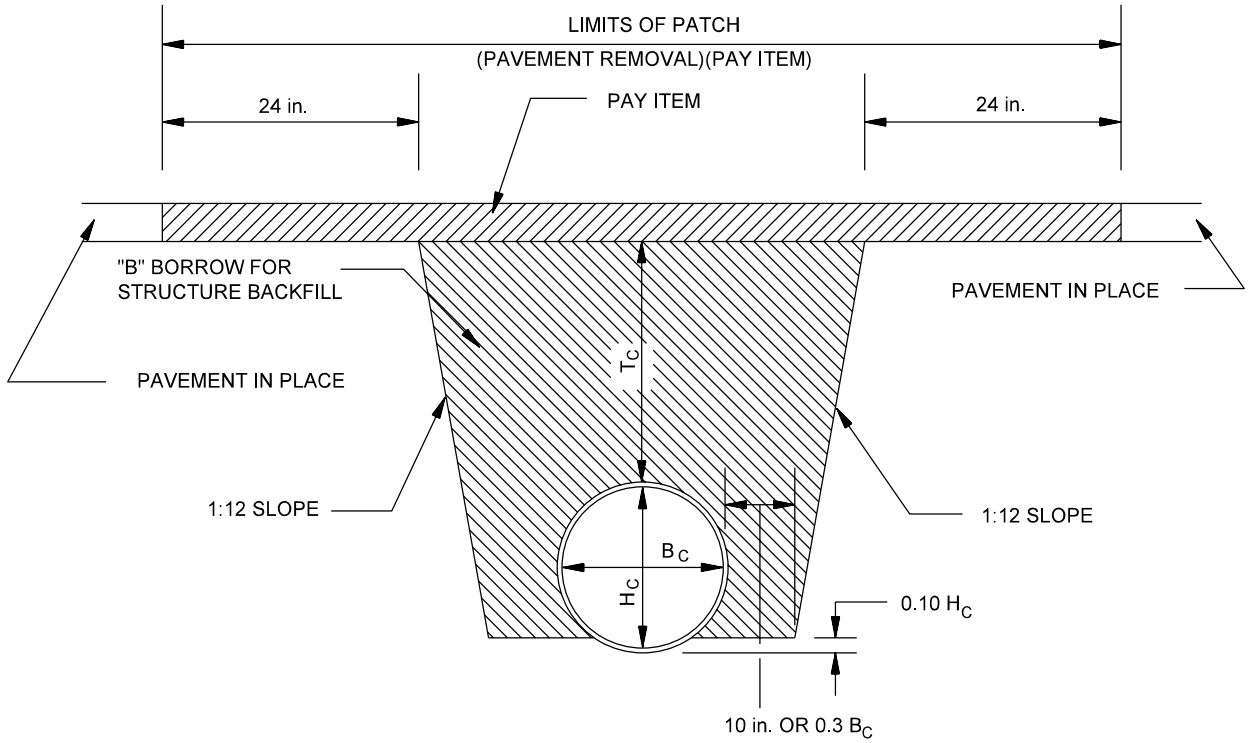

Note:

B_C = Overall diameter or span

H_C = Overall diameter or span

T_C = Trench cover depth

PLACING PIPE UNDER EXISTING ROADWAY

Figure 17-4C