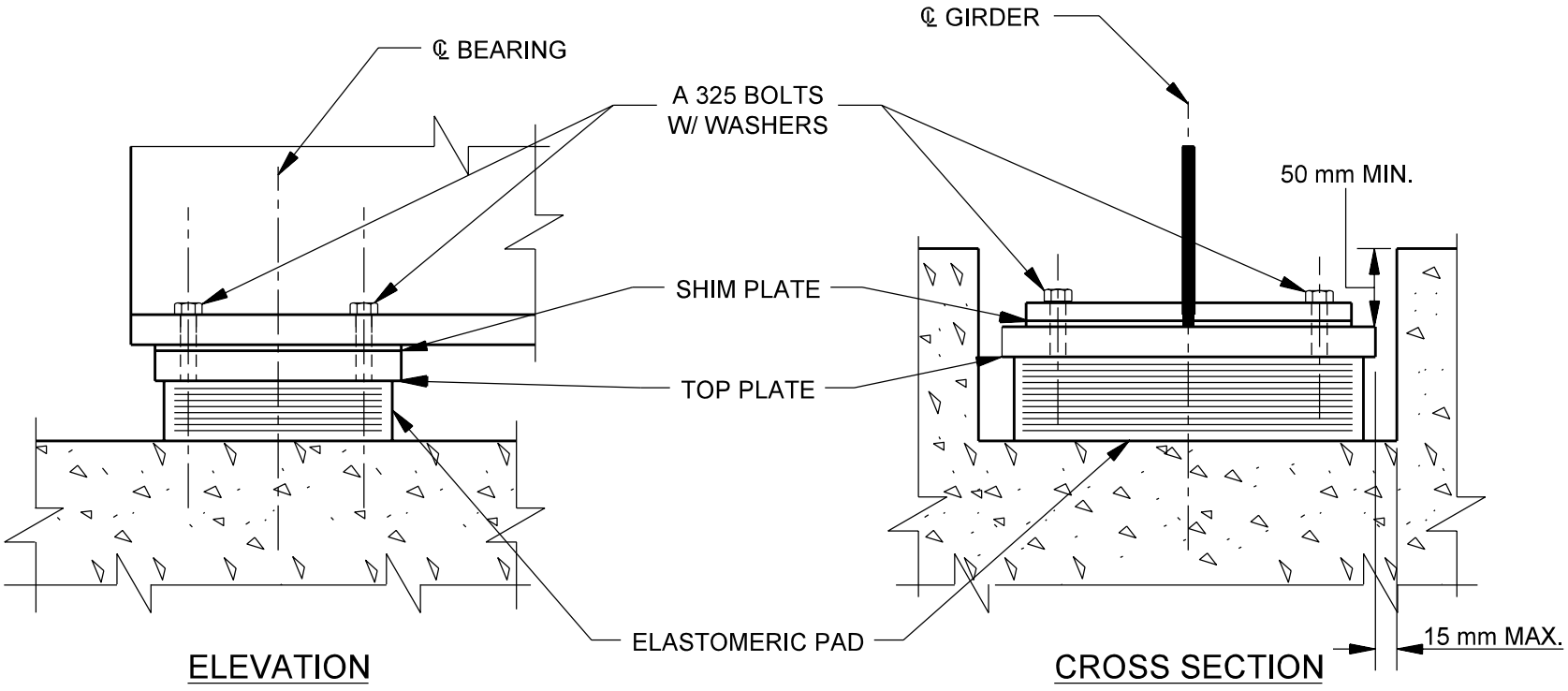

ELASTOMERIC BEARING ASSEMBLY

Figure 67-4J