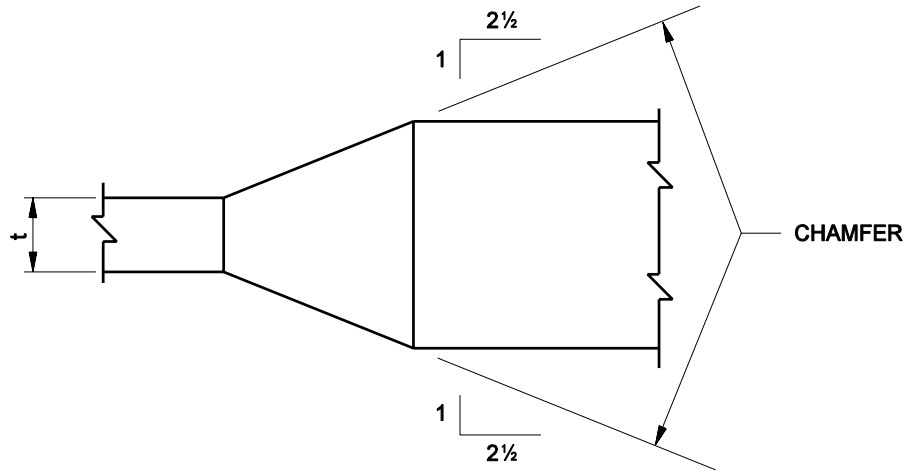

WEB SPLICE DETAILS

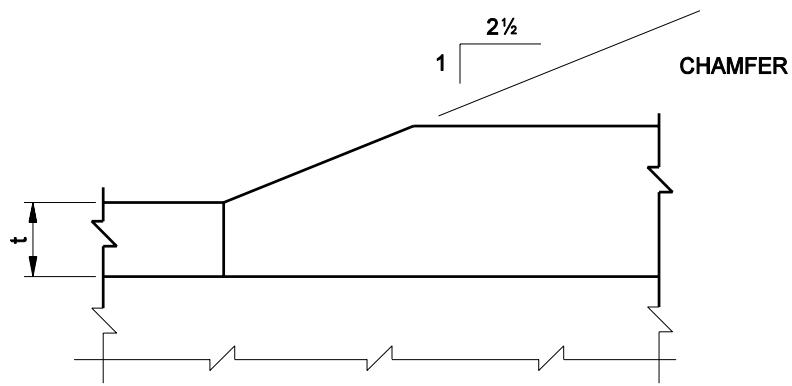

FLANGE SPLICE DETAILS

WELDING SYMBOLS

Figure 64-8E